KMC ALUMINIUM LTD.

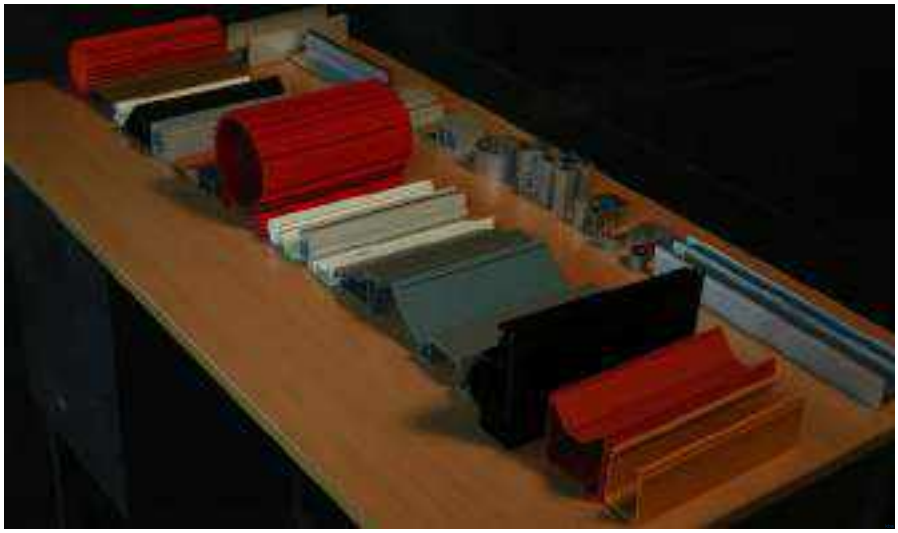

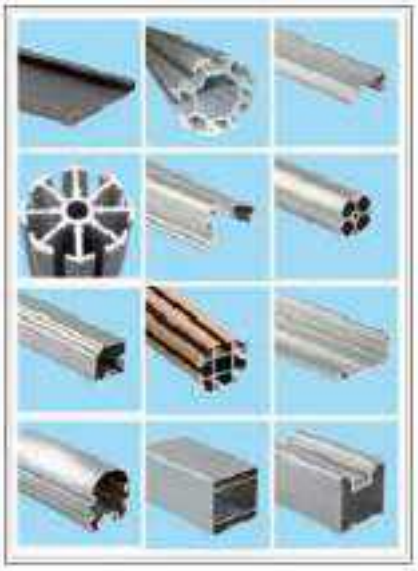





GENERAL INFORMATION

WROUGHT ALLOYS: CHEMICAL COMPOSITION LIMITS (PERCENT)

USA AA	ISS OLD	ISS NEW	Cu		Mg		Si		Mn		Fe MAX.	OTHER MAX.	REMARKS
			MIN.	MAX.	MIN.	MAX.	MIN.	MAX.	MIN.	MAX.			
1050	IB	19500		0.05				0.3		0.05	0.4	0.1	AL. 99.5% MIN.
1070		19700		0.03				0.2		0.03	0.25	0.1	AL. 99.7% MIN.
1080	IA	19800		0.03				0.15		0.03	0.15	0.1	AL. 99.8% MIN.
1100	IC	19000		0.10		0.2		0.5		0.1	0.7	0.2	AL. 99.0% MIN.
2011			5.0	6.0		0.1		0.4		0.1	0.7	0.4	ALSO LEAD & BISMUTH 0.2 - 0.6 % EACH
2014	H15	24345	3.8	4.8	0.2	0.8	0.5	1.2	0.3	1.2	0.7	05	
2017	H14	24534	3.5	4.7	0.4	1.2	0.2	0.7	0.4	1.2	0.7	0.5	
3103	N3	31000		0.1		0.1		0.6	0.8	1.5	0.7	0.4	
5052	N4	52000		0.1	1.7	2.6		0.6		0.5	05	0.4	
5086	N5	53000		0.1	2.8	4.0		0.6		0.5	0.5	0.4	
6261		65032		0.15	0.7	1.2	0.4	0.8		0.2	0.7		
6061	H20	65028		0.15	0.7	1.2	0.4	0.8	0.2	0.8	0.7		
6063	H9	63400		0.1	0.4	0.9	0.3	0.7		0.3	0.6	0.4	
6066	H11	64423	0.7	1.2	0.8	1.4	0.9	1.8	0.6	1.1	0.7	0.4	
6101	91E	63401		0.1	0.35	0.8	0.3	0.7		0.03	0.5	0.1	
6201		64401		0.1	0.6	0.9	0.5	0.9		0.03	0.5	0.1	
6351	H30	64430		0.1	0.4	1.2	0.6	1.3	0.4	1	0.6	0.4	
6005		62400		0.1	0.4	0.6	0.6	0.9		0.1	0.35		
6060		63400		0.1	0.35	0.6	0.3	0.6		0.1	0.3		

Cu - COPPER
Mg - MAGNESIUM Si - SILICON
Mn - MANGANESE
Fe - IRON

GENERAL INFORMATION

WROUGHT ALLOYS: MECHANICAL PROPERTIES

NON HEAT TREATABLE ALLOYS

USA AA	ISS OLD	ISS NEW	TEMPER	TEMPER		0.2% PROOF STRESS kg/mm^2	ELONGATION G.L. FOR Ø12.5 mm ROUND
				MIN.	MAX.		
1050	IB	19500	0	6.5	9.50	---	30
1070	---	19700	0	---	9.50	---	23
1080	IA	19800	0	---	9.00	---	35
1100	IC	19000	0	6.5	11.00	---	18
3103	N3	31000	0	9	13.0	---	24
5005		51000A	0	10	15.00	---	20
5052	N4	52000A	0	17	22.00	6.00	14
5086	N5	53000	0	20.5	27.50	10.00	14

HEAT TREATABLE ALLOYS

USA AA	ISS OLD	ISS NEW	TEMPER	TEMPER		0.2% PROOF STRESS kg/mm^2	ELONGATION G.L. FOR Ø12.5 mm ROUND
				MIN.	MAX.		
6063	H9	63400	T4(W)	11	---	8.0	13
6063	H9	63400	T6(WP)	19.0	---	15.5	7
6061	H20	65028	M (or) O	11.0	17.5	---	12
6061	H20	65028	T4(W)	19	---	11.0	15
6061	H20	65028	T6(WP)	28.5	---	23.5	7
6261	H20	65032	M (or) O	11.0	17.5	---	12
6261	H20	65032	T4(W)	19	---	11.0	15
6261	H20	65032	T6(WP)	28.5	---	23.5	7
6351	H30	64430	M (or) O	11	17.5	---	16
6351	H30	64430	T4(W)	19.0	---	11.0	14
6351	H30	64430	T6(WP)	30.0	---	25.0	7
6066	H11	64423	O	---	20.5	---	16
6066	H11	64423	T4(W)	28.0	---	17.5	14
6066	H11	64423	T6(WP)	35.0	---	31.5	7
6101	91E	63401	T4(W)	15.0	---	6.5	14
6101	91E	63401	T6(WP)	20.0	---	17.0	8
6201	---	64401	T4(W)	16.0	---	7.0	14
6201	---	64401	T81(WDP)	32.0	---	---	3

TEMPER AND DESIGNATION

INDIA (or) U.K.	U.S.A	DESCRIPTION
0	O	ANNEALED
M	F	AS FABRICATED AS MANUFACTURE (or) AS CAST
W	T4	SOLUTION HEAT - TREATED NATURALLY AGED AND AMENABLE TO ARTIFICIAL AGEING
P	T5	ARTIFICIALLY AGED (or) PRECIPITATION HEAT - TREATED
WP	T6	SOLUTION HEAT - TREATED AND PRECIPITATION HEAT - TREATED

BS 1474:1987

TABLE 6

DIAMETER, WIDTH (OR) WIDTH ACROSS FLAT		TOLERANCES ±mm
OVER (mm)	UPTO AND INCLUDING (mm)	
---	3	0.16
3	10	0.20
10	18	0.26
18	30	0.32
30	40	0.40
40	60	0.45
60	80	0.50
80	100	0.65
100	120	0.80
120	140	0.90
140	160	1.0
160	180	1.1
180	200	1.2
200	240	1.3
240	280	1.5
280	320	1.7

KMC ALUMINIUM

INDEX

S.NO.	PROFILE CATEGORY
01	ROUND PIPE
02	ROUND ROD
03	SQUARE TUBE
04	SQUARE BAR
05	HEXAGON BAR
06	RECTANGULAR TUBE
06A	RECTANGULAR TUBE WITH FULL RADIUS
07	FLAT BAR
07A	FLAT BAR WITH CORNER RADIUS
08	RADIUS FLAT BAR
09	EQUAL ANGLE
10	UNEQUAL ANGLE
11	SINGLE CHANNEL (OR) U - CHANNEL
12	FLUTED TUBE & RECTANGULAR TUBE WITH C.RADIUS
13	GENERAL
14	AC GRILL
15	ARCHITECTURAL
16	AUTOMOBILE
17	HVAC,AHU & THERMAL BREAK
18	LADDER
19	MESH
20	MODULAR
21	MOTOR BODY
22	OEM
23	POWER
24	RAILWAY
25	TRANSPORT
26	ELEVATOR
27	COMMON PROFILES
28	SOLAR

COMMERCIAL

COMMERCIAL

KMC ALUMINIUM

ROUND PIPE

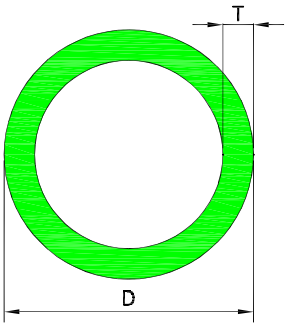

D - OUTER DIAMETER
T - THICKNESS

SEC NO	D	T	WT/RANGE/12'
1606	5.60	1.20	0.145 - 0.180
1605	6.30	1.10	0.160 - 0.190
K6868	7.00	1.00	0.168 - 0.206
1607	7.50	0.65	0.120 - 0.150
1608	7.90	0.90	0.175 - 0.210
K7661	8.00	1.00	0.0059 kg/m
1610	9.00	0.65	0.150 - 0.185
1609	9.40	0.70	0.170 - 0.200
K6999	11.90	1.00	0.093 kg/m
K6998	12.3	0.90	0.078 - 0.096
1613	12.7	0.90	0.290 - 0.370
1613/A	12.7	1.20	0.385 - 0.462
11696	12.7	2.35	0.678 - 0.814
1612	12.8	1.70	0.530 - 0645
1613/B	13.9	0.8	0.293 - 0.352
K6800	14.00	4.05	1.129 - 1.381
K7576	14.60	1.00	0.115 kg/m
K6776	14.65	0.90	0.346 - 0.423
1614	14.80	0.75	0.256 - 0.395
1615	15.00	2.00	0.725 - 0.885
1615H	15.00	2.40	0.840 - 1.015
1616L	15.00	1.20	0.490 - 0.590
K7991	16.00	1.00	0.127 kg/m
K7653	16.00	1.75	0.211 kg/m
1616	16.00	1.80	0.710 - 0.870
K6893	16.00	3.80	1.301 - 1.591
K8004	16.00	4.00	0.407 kg/m
K7075	16.80	3.40	0.392 kg/m
16117	17.45	5.20	1.800 - 2.154
11617/A	17.50	2.65	1.099 - 1.321
6901	17.90	1.30	0.590 - 0.750
K7838	18.00	2.00	0.271 kg/m
K6894	18.00	3.90	1.542 - 1.884
K7933	18.20	1.80	0.25 kg/m

SEC NO	D	T	WT/RANGE/12
1617	18.50	1.30	0.620 - 0.760 '
1618	18.50	1.60	0.755 - 0.920
1619	19.00	3.50	1.510 - 1.850
1628	19.00	2.00	0.970 - 1.140
1629	19.00	0.80	0.400 - 0.510
1630	19.00	1.00	0.500 - 0.610
K6961	19.00	1.20	0.165 - 0.201
11702	19.00	2.00	0.948 - 1.138
K6726	19.00	2.00	0.948 - 1.138
K7045	20.00	1.60	0.251 kg/m
K7901	20.00	1.45	0.228 kg/m
11694	20.00	2.10	1.116 - 1.339
K7179	20.00	3.89	0.538 kg/m
K7343	20.10	1.30	0.21 kg/m
K7289	20.10	1.50	0.24 kg/m
1692	21.00	5.50	2.380 - 2.860
11621	21.00	5.00	2.235 - 2.682
11621/A	21.00	3.00	1.508 - 1.810
1621	21.50	5.00	2.300 - 2.810
1622	22.00	0.80	0.420 - 0.630
11697	22.00	2.00	0.339 kg/m
K6950	22.00	2.00	0.341 kg/m
11701	22.00	3.00	1.591 - 1.909
11711	22.00	7.00	2.944 - 3.600
1620	22.20	1.00	0.530 - 0.790
K7572	22.20	2.50	0.417 kg/m
K6412	22.23	3.32	1.759 - 2.149
1623	23.00	4.5	2.325 - 2.840
2524	24.00	3.50	2.200 - 2.500
1624	24.50	2.75	1.670 - 2.040
K7902	24.80	1.45	0.287 kg/m
K7288	24.80	1.50	0.3 kg/m
1625	25.00	3.00	2.050 - 2.350
1625/A	25.00	2.00	1.285 - 1.570
1625/B	25.00	1.60	1.040 - 1.280
K6945	25.00	1.60	1.051 - 1.285
1625/T	25.00	5.75	3.090 - 3.710

COMMERCIAL

COMMERCIAL

ALL DIMENSIONS ARE IN MM

KMC ALUMINIUM

ROUND PIPE

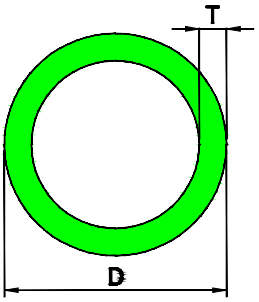

D - OUTER DIAMETER
T - THICKNESS

SEC NO	D	T	WT/RANGE/12'
K7344	25.10	1.30	0.266 kg/m
K6677	25.40	1.50	1.980 - 2.410
1626	25.40	3.18	1.067 - 1.305
11688	25.40	2.00	1.307 - 1.569
K7571	25.40	2.50	0.485 kg/m
11700	25.40	7.70	3.807 - 4.569
1690	25.50	6.25	3.360 - 4.030
2526	26.00	3.20	2.150 - 2.350
K7992	27.00	4.50	0.858 kg/m
1627L	27.00	5.50	3.300 - 3.970
K7180	27.00	7.38	1.245 kg/m
1627	27.00	6.30	4.030 - 4.350
2527	27.00	3.20	2.200 - 2.500
2530	27.00	3.60	2.350 - 2.825
K6949	28.00	2.65	0.578 kg/m
11695	28.00	5.82	3.610 - 4.332
2528	28.00	4.00	2.800 - 3.000
K8006	28.00	7.50	1.304 kg/m
2528/A	28.80	3.00	2.200 - 2.500
2529	29.00	4.50	3.080 - 3.696
K7245	29.00	6.75	1.292 kg/m
K7266	30.00	2.00	0.482 kg/m
1634	30.00	4.00	2.900 - 3.230
1635	30.00	3.00	2.380 - 2.650
11630	30.00	6.00	4.022 - 4.826
K7633	30.00	7.50	1.431 kg/m
1667	30.00	8.85	5.520 - 6.070
K7639	30.00	8.90	1.592 kg/m
1687	30.00	7.90	4.872 - 5.846
K6743	30.00	6.50	4.286 - 5.238
K7573	30.20	1.60	0.388 kg/m
1631	31.80	3.18	2.540 - 3.100
1637	31.80	1.80	1.530 - 1.830
2531	31.80	4.50	3.600 - 4.100
K6863	31.80	2.3	1.904 - 2.327

SEC NO	D	T	WT/RANGE/12'
1632	32.00	4.00	3.130 - 3.820
1674	32.00	7.00	5.240 - 5.625
11632	32.00	9.00	5.783 - 6.940
K6676	32.00	5.00	3.785 - 4.626
K8007	32.00	5.50	1.236 kg/m
11632/A	32.00	10.00	6.146 - 7.376
2532	32.40	3.20	2.610 - 3.133
1633	33.00	6.20	4.640 - 5.670
1633/T	33.00	5.75	4.690 - 5.030
1642	33.40	3.38	3.000 - 3.300
K7677	33.50	3.05	0.787 kg/m
K7221	33.50	5.05	1.236 kg/m
K7762	33.50	6.20	1.435 kg/m
K7679	33.50	7.00	1.573 kg/m
1633/A	33.50	9.50	7.080 - 7.450
11708	33.50	9.75	7.100 - 7.907
1633/B	33.50	12.50	7.950 - 8.410
11709	33.50	8.875	7.000 - 7.738
1643	33.70	3.20	2.840 - 3.215
K7466	33.80	1.10	0.305 kg/m
11706	33.92	8.79	6.170 - 7.541
K7763	34.00	7.40	1.669 kg/m
11634	34.30	9.05	6.242 - 7.490
2533	34.40	4.50	4.150 - 4.400
K7570	34.90	2.20	0.61 kg/m
2534	34.90	4.75	4.400 - 4.800
K7198	35.00	1.50	0.432 kg/m
11698	35.00	2.50	2.270 - 2.714
2535	35.00	4.50	4.000 - 4.450
2536	35.00	3.50	3.230 - 3.450
K8008	35.00	5.00	1.272 kg/m
K7540	35.00	5.75	1.426 kg/m
K6742	35.00	8.50	6.318 - 7.722
11693	36.00	6.00	1.547 kg/m
1686	36.00	7.00	5.672 - 6.807
2538	36.40	5.25	4.570 - 5.485
1636	37.00	0.85	0.870 - 1.060
K6941	37.00	3.00	2.859 - 3.495
2537	37.00	4.50	4.340 - 4.550

COMMERCIAL

COMMERCIAL

ALL DIMENSIONS ARE IN MM

KMC ALUMINIUM

ROUND PIPE

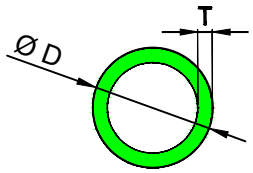

D - OUTER DIAMETER
T - THICKNESS

SEC NO	D	T	WT/RANGE/1'
1638L	38.00	4.5	4.200 - 5.0002'
1638	38.00	7.5	6.400 - 7.800
K6761	38.00	8.1	6.782 - 8.290
1639B	38.00	2.00	1.560 - 1.900
11638	38.00	5.50	4.994 - 5.993
K6874	38.00	6.75	5.917 - 7.231
1639	38.10	3.18	3.400 - 3.800
1640	38.10	6.35	5.800 - 6.800
K6864	38.10	2.10	2.187 - 2.673
1641	40.00	5.00	5.000 - 5.800
1644	40.00	3.20	3.425 - 3.880
K6896	40.00	1.60	1.723 - 2.105
K7320	40.00	2.50	0.806 kg/m
K6993	40.00	9.50	2.220 - 2.714
K7345	40.10	1.80	0.593 kg/m
2541	41.82	4.56	5.250 - 5.500
K7903	42.00	1.90	0.646 kg/m
11692	42.00	6.00	6.034 - 7.241
11704	42.00	7.00	6.844 - 8.213
K7759	42.00	10.75	2.849 kg/m
2542	42.20	4.75	5.800 - 6.100
2543	42.80	5.25	5.510 - 6.610
K7761	43.00	5.25	1.681 kg/m
K7676	43.00	6.20	1.935 kg/m
1644H	43.00	7.50	7.440 - 8.920
K7569	44.00	2.00	0.712 kg/m
K7710	44.00	5.10	1.682 kg/m
K6564	44.00	10.5	9.862 - 12.054
K7219	44.45	1.45	0.536 kg/m
1645	45.00	3.00	3.250 - 4.300
1646	45.00	10.75	11.164 - 11.695
11639	45.00	8.25	8.472 - 10.167
K7229	46.00	9.38	2.955 kg/m
2549	47.90	4.50	5.800 - 6.330
K6988	48.00	1.80	0.637 - 0.779
K6582	48.00	6.50	9.25 - 7.566
1647	48.00	9.50	11.230 - 11.470
1648	48.00	8.50	9.500 - 11.500
11648	48.00	13.00	12.713 - 15.255
11691	48.00	7.00	8.017 - 9.621

SEC NO	D	T	WT/RANGE/12'
K6613	48.30	4.00	5.247 - 6.075
1649	50.00	2.50	3.450 - 3.922
1650	50.00	1.10	1.500 - 1.830
1651	50.00	10.00	11.250 - 13.700
1652	50.00	5.00	6.300 - 7.600
K6771	50.00	11.50	12.418 - 15.178
K7346	50.10	2.20	0.907 kg/m
K6897	50.60	1.60	2.197 - 2.685
K7904	50.60	2.10	0.863 kg/m
1653	50.80	3.18	4.250 - 5.150
1656	50.80	6.35	8.500 - 9.000
1658	50.80	2.00	2.700 - 3.300
K6865	50.80	1.80	2.474 - 3.024
K7220	50.80	7.90	2.917 kg/m
K7612	50.80	9.52	3.334 kg/m
1652/A	52.00	7.00	8.800 - 10.700
K7192	52.00	7.50	2.872 kg/m
K7318	52.00	10.00	3.615 kg/m
11707	52.82	1.69	2.408 - 2.943
K7966	54.00	2.50	1.092 kg/m
K7965	54.00	5.00	2.078 kg/m
K7760	54.50	11.63	4.227 kg/m
1654	54.00	10.00	13.400 - 14.000
11654	54.00	12.00	14.082 - 16.898
11690	54.00	7.00	9.193 - 11.032
K7186	54.00	8.00	3.121 kg/m
1691	55.00	2.50	3.670 - 4.400
K7197	55.50	9.25	3.682 kg/m
1665	56.00	2.00	3.100 - 3.600
1655	56.00	3.00	4.930 - 5.755
K7542	56.00	4.00	1.826 kg/m
K7193	56.00	8.00	3.305 kg/m
K7312	56.00	12.00	4.545 kg/m
1655/A	56.20	1.60	2.450 - 2.950
1657/A	57.00	2.60	4.150 - 4.600
1657	58.00	10.00	14.400 - 15.400
K6719	58.00	12.00	15.482 -18.922
K7820	59.00	8.00	3.46 kg/m
1666	60.00	2.50	4.190 - 4.730
K6614	60.00	5.00	8.14 - 9.425
K7196	60.00	8.50	3.76 kg/m

COMMERCIAL

COMMERCIAL

ALL DIMENSIONS ARE IN MM

KMC ALUMINIUM

ROUND PIPE

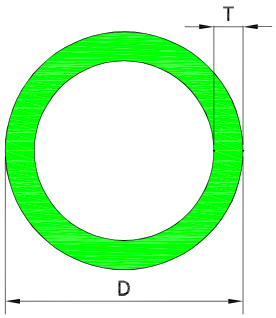

D - OUTER DIAMETER
T - THICKNESS

SEC NO	D	T	WT/RANGE/12'
1659	60.41	1.63	2.700 - 3.200
1660	61.00	2.60	4.250 - 5.100
1661	61.00	3.00	4.900 - 5.900
K7234	61.50	3.00	1.51 kg/m
2562	62.00	5.30	8.395 - 10.075
1663	63.00	3.15	5.500 - 6.200
K6791	63.00	2.00	3.423 - 4.183
K7905	63.50	2.30	1.193 kg/m
K7678	63.50	9.50	4.351 kg/m
1662	64.00	2.50	3.462 - 4.230
K7185	64.00	8.00	3.8 kg/m
1664	64.00	11.50	18.400 - 20.100
11664	64.00	15.00	20.536 - 24.643
11664/A	64.00	12.00	17.435 - 20.921
K8049	65.40	1.20	0.653 kg/m
K6720	65.70	2.50	4.431 - 5.415
K7347	67.60	2.30	1.292 kg/m
11668	68.00	12.5	19.379 - 23.255
1668	68.00	18.00	27.500 - 28.400
1670	70.00	4.50	8.300 - 10.000
1671	70.00	5.00	9.700 - 10.500
1672	70.00	8.00	14.800 - 16.000
1673	70.00	10.00	18.250 - 19.000
1677	70.00	2.80	5.500 - 6.170
1669	71.00	3.50	6.500 - 7.740
1676	73.66	1.27	2.720 - 3.180
K7529	72.00	13.50	6.698 kg/m

SEC NO	D	T	WT/RANGE/12'
1675	75.00	3.5	7.760 - 8.870
1684	75.00	2.50	5.065 - 6.080
1682	76.00	8.00	15.200 - 18.240
K7423	76.00	10.50	5.92 kg/m
1676/A	76.20	6.35	13.300 - 14.200
1676/B	76.20	9.50	19.260 - 20.085
K7967	76.20	10.35	5.781 kg/m
K7452	76.20	15.85	8.233 kg/m
1678	77.50	9.25	19.160 - 19.920
1679	77.50	9.25	19.160 - 19.920
1680	80.00	4.50	10.300 - 11.240
1681	80.00	10.00	21.080 - 22.380
1685	80.00	4.00	8.490 - 10.190
1683	83.80	33.15	51.890 - 52.360
K6898	84.80	2.00	4.645 - 5.677
K7348	84.80	2.40	1.702 kg/m
K7906	88.90	2.60	1.903 kg/m
1688	88.90	5.46	13.625 - 14.400
11699	88.90	7.62	17.303 - 20.764
1689	89.00	3.00	7.500 - 8.500
11669	89.10	1.60	3.910 - 4.692
11689	89.10	1.60	3.911 - 4.694
K7907	100.20	2.60	2.152 kg/m
1699	100.00	4.00	11.550 - 12.300
K7515	100.00	6.00	4.784 kg/m
1698/B	101.50	6.35	18.150 - 19.300
1698	101.60	3.18	9.100 - 10.320
K6899	101.8	2.3	6.417 - 7.843
K7349	101.80	2.50	2.136 kg/m
1697	105.00	3.15	9.330 - 10.590
1696	106.40	4.00	12.080 - 13.350
K7305	108.00	9.00	7.669 kg/m
16110	110.00	3.50	10.910 - 12.230
11703	114.20	8.51	25.129 - 30.155
K7908	148.20	3.00	3.694 kg/m
K7469	153.00	2.75	3.504 kg/m
K8051	205.00	3.20	5.478 kg/m

COMMERCIAL

COMMERCIAL

ALL DIMENSIONS ARE IN MM

KMC ALUMINIUM

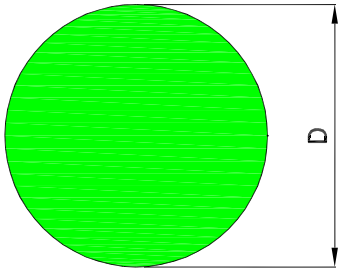

D - DIAMETER

SEC NO	D	WT/RANGE/12'
1201	6.00	0.260-0.320
1203	8.00	0.460-0.550
1209	9.00	0.620-0.720
1210	9.60	0.710-0.800
1205	10.00	0.650-0.800
K6911	11.00	0.850-1.039
1206	11.50	1.030 - 1.070
K7309	11.70	0.294 kg/m
1212	12.20	1.115 - 1.200
1211	12.70	1.200-1.350
1214	14.00	1.369 - 1.643
1216	15.70	1.800-2.000
1220	19.00	2.730-2.950
K8027	19.50	0.805 kg/m
1222	22.00	3.750-3.950
1223	23.00	1.138 kg/m
1224	24.00	4.400-4.700
1225	25.40	4.800-5.200
K7994	27.00	1.545 kg/m
1228	28.00	6.000-6.500
1230	30.50	6.900 - 7.508
K6685	32.00	7.182 - 8.77'

SEC NO	D	WT/RANGE/12'
1235	35.00	8.558 - 10.269
1238	38.00	11.250-11.600
K7090	38.50	3.189 kg/m
1239	39.60	12.078 - 13.286
1244	44.45	13.802 - 16.562
1250	50.80	20.000-21.000
1255	55.00	23.000-24.000
1257	57.00	25.000-26.000
1263	63.00	30.700-31.700
1265	65.00	32.800-33.800
1270	70.00	36.600-37.800
1276	76.20	45.000-46.000
1280	80.00	49.600-51.200
1290	90.00	56.578 - 67.893
K7271	91.40	17.977 kg/m
1299	110.00	95.600 - 96.200

COMMERCIAL

COMMERCIAL

KMC ALUMINIUM

SQUARE TUBE

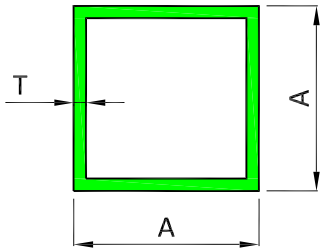

A - SIDE
T - THICKNESS

SEC NO	A	T	WT/RANGE/12'
K7409	18.00	0.60	0.114 kg/m
1855	20.00	1.60	1.100 - 1.300
K7485	20.00	2.00	0.388 kg/m
1830	30.00	0.80	0.850 - 1.000
1830 L	30.00	0.67	0.700 - 0.850
K7315	30.00	2.00	0.613 kg/m
1830 H	30.00	3.00	3.000 - 3.370
K7314	30.00	4.00	1.139 kg/m
K7690	34.00	2.00	0.691 kg/m
1837	38.00	1.60	2.070 - 2.530
1838	38.00	0.84	1.150 - 1.350
1838L	38.00	0.59	0.800 - 0.950
1838M	38.00	1.20	1.700 - 1.800
K7316	40.00	2.00	0.832 kg/m
1882	40.00	4.00	5.122 - 6.146
K8012	40.00	2.5	1.012 kg/m
1843	43.00	2.0	3.000 - 3.480
1868	50.00	1.00	1.900 - 2.100
1869	50.00	2.00	3.800 - 4.100
K7028	50.00	2.50	1.287 kg/m
1870	50.00	3.00	5.500 - 5.900
1872	50.00	1.50	2.580 - 3.160
1881	50.00	5.00	8.004 - 9.605
1860	60.00	4.00	7.968-9.562
1871	70.00	2.00	5.500 - 5.800
K6929	70.60	1.50	1.119 kg/m
7057	76.00	2.00	5.900 - 6.500
1880	80.00	7.00	19.650 - 20.750
K7384	100.00	3.00	3.189 kg/m
5055	105.00	2.50	10.200 - 10.700

COMMERCIAL

COMMERCIAL

ALL DIMENSIONS ARE IN MM

KMC ALUMINIUM

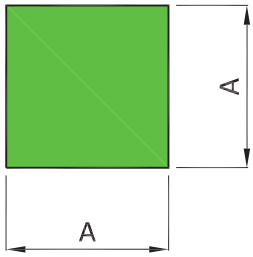

A - SIDE

SEC NO	A	WT/RANGE/12'
1015	5.00	0.220 - 0.265
K7474	6.00	0.094 kg/m
1012	12.00	1.280 -1.560
1013	12.70	1.430 -1.730
1019	19.05	3.230-3.930
1025	25.00	5.600- 6.850
1030	30.00	8.460-9.330
K7404	32.50	2.851 kg/m
1035	35.00	11.900-12.300
1038	38.10	13.620-15.050
1050	50.80	24.220-26.780
K7250	51.50	7.266 kg/m
K7550	61.00	10.044 kg/m
1063	63.50	37.240-42.420
1089	67.54	40.371 - 48.445
1076	76.20	55.000-60.000
1088	88.00	68.273-82.648
K7443	90.00	22.193 kg/m
K7136	100.00	24 kg/m

COMMERCIAL

COMMERCIAL

KMC ALUMINIUM

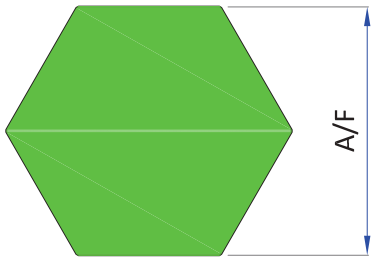

SEC NO	A/F	WEIGHT (kg/m)
1081	10.00	0.234
K6910	11.20	0.294
1082	27.00	1.705
1080	30.00	2.081
K6834	41.20	3.984
1083	50.80	6.034

COMMERCIAL

COMMERCIAL

KMC ALUMINIUM

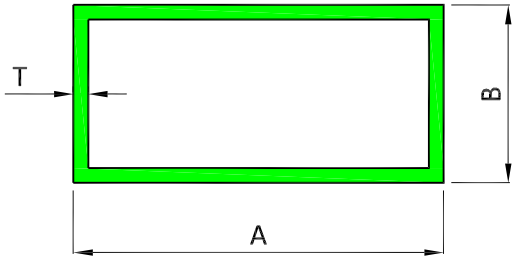

A - WIDTH
B - HEIGHT
T - THICKNESS

SEC NO	A	B	T	WT/RANGE/12'
K6558	25.00	10.00	0.80	0.484 - 0.592
1973	30.00	15.00	0.75	0.173 kg/m
K7484	30.00	20.00	2.00	0.496 kg/m
1996	31.75	12.70	1.60	1.172 -1.407
1998	40.00	20.00	2.00	1.989 - 2.387
1944	44.50	38.10	1.78	2.380 - 2.775
1924	50.00	25.00	0.90	1.250 - 1.500
1929	50.00	25.00	1.30	1.900 - 2.100
1930	50.00	25.00	1.50	2.100 - 2.300
1931	50.00	25.00	2.00	2.670 - 2.940
1981	50.00	30.15	3.00	3.952 - 4.743
1959	60.00	40.00	3.00	5.275 - 5.865
K6809	60.00	40.00	5.00	8.034 - 9.820
1960	60.00	40.00	1.50	3.000 - 3.300
1938	63.50	38.10	1.45	2.800 - 3.000
1939	63.50	38.10	1.55	3.100 - 3.300
1940	63.50	38.10	1.65	3.300 - 3.500
1941	63.50	38.10	2.00	3.600 - 4.000
1993	70.00	20.00	2.00	3.057 - 3.668
K7782	71.00	21.00	2.00	0.95 kg/m
1974	75.00	25.00	2.00	3.750 - 4.150
1975	75.00	25.00	3.00	5.300 - 5.800
1976	76.00	38.00	3.00	6.500 - 7.000
1976 A	76.00	38.00	2.00	3.907 - 4.688
K7056	76.20	50.80	3.17	2.095 kg/m
1980	80.00	45.00	1.80	4.000 - 4.400
K6724	80.00	50.00	3.00	6.641 - 8.117
1978	82.00	38.00	1.50	3.600 - 4.000
1979	82.00	38.00	3.00	6.700 - 7.000
K7030	100.00	25.00	1.50	0.992 kg/m
1982	100.00	25.00	1.90	4.500 - 5.000
1990	100.00	55.00	2.00	5.478 - 6.573
1994	100.00	50.00	3.00	7.685 - 9.222
K6748	100.00	30.00	3.00	6.641 - 8.117

SEC NO	A	B	T	WT/RANGE/12'
1988	101.6	44.45	1.35	3.800 - 4.200
1991	101.6	44.45	2.00	5.500 - 6.000
19001	101.60	50.00	4.00	10.214 - 12.257
1997	103.00	46.00	3.60	8.900 - 10.680
1992	120.0	60.00	5.00	16.125 - 17.470
1977	120.0	50.00	3.00	8.911 - 10.694
K7057	120.0	80.00	3.00	3.188 kg/m
K6723	130.0	50.00	3.00	9.319 - 11.39
1995	150.00	50.00	2.50	8.669 - 10.403
K6692	160.00	40.00	4.00	13.713 - 16.761

COMMERCIAL
COMMERCIAL

KMC ALUMINIUM

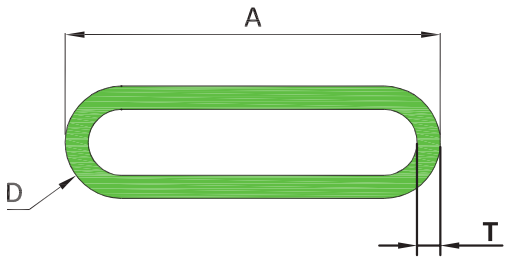

A - WIDTH
D - DIAMETER
T- THICKNESS

SEC NO	A	D	T	kg/m
K6959 A	33.00	13.00	1.20	0.253
K6960 A	38.00	20.00	1.20	0.312
K6959	34.00	13.70	1.55	0.340
K6960	38.90	21.20	1.80	0.456

COMMERCIAL
COMMERCIAL

KMC ALUMINIUM

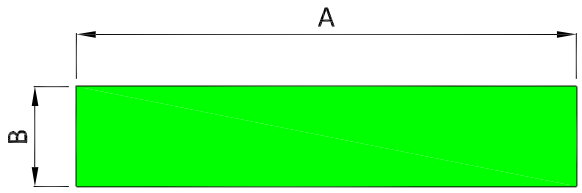

A - WIDTH
B - THICKNESS

SEC NO	A	B	WT/RANGE/12'
K6939	6.35	3.20	0.181 - 0.221
K7617	10.00	4.00	0.107 kg/m
1173	12 .70	6.35	0.675 - 0.740
11113	13.00	4.20	0.480 - 0.580
1105	15.00	8.00	1.060-1.300
1106	18.00	2.00	0.320-0.380
1107	19.00	5.00	0.840-1.000
1108	19.00	3.00	0.415-0.500
1110	19.00	10.00	1.690-2.050
1113	19.00	6.00	1.010-1.240
K6411	19.05	6.35	1.081 - 1.321
1111	25.00	2.00	0.450-0.550
1114	25.00	3.00	0.520-0.600
1118	25.00	10.00	2.220-2.720
1119	25.00	12.00	2.700-3.230
1120	25.00	18.00	4.000-4.850
1197	25.00	6.00	1.335 - 1.600
1116	25.40	6.35	1.430-1.730
K6409	25.40	4.78	1.074 - 1.312
K6410	28.19	4.78	1.195 - 1.461
1122	28.70	4.50	1.150-1.400
1115	31.00	3.50	1.000 - 1.130
K6469	31.80	6.50	1.802 - 2.202
1121	32.00	6.00	1.700-2.100
1123	32.00	10.00	3.100-3.225

SEC NO	A	B	WT/RANGE/12'
1124	32.00	12.00	3.400-4.200
K7290	32.00	12.70	1.113 kg/m
1199	32.00	25.00	7.115 - 8.540
K6711	35.00	2.00	0.623 - 0.761
K6729	35.00	3.9	1.212 - 1.482
K6801	35.00	2.96	0.925 - 1.131
11107	36.00	4.00	1.278 - 1.533
1135	38.00	6.00	2.000-2.500
1112	38.10	25.40	9.075-10.025
1117	38.10	3.00	1.050-1.200
1125	38.10	6.35	2.150-2.630
1127	38.10	12.70	4.550-5.000
1126	40.00	10.00	3.600-4.200
1126/A	40.00	16.00	6.000-6.600
1172	40 .0	6.0	2.250 - 2.475
1174	41.0	20.0	7.975 - 8.230
K7377	44.60	27.50	3.358 kg/m
11131	49.00	9.50	4.600 - 4.695
1128	50.00	10.00	4.700-5.200
1129	50.00	2.00	0.890-1.090
1129/A	50.00	8.00	3.750-4.130
1132	50.00	12.00	5.640-6.220
1143/A	50.00	20.00	9.800-10.800
1144L	50.00	2.69	1.190-1.430
1144	50.40	3.00	1.420-1.560
1130	50.80	6.35	3.000-3.350

COMMERCIAL
COMMERCIAL

KMC ALUMINIUM

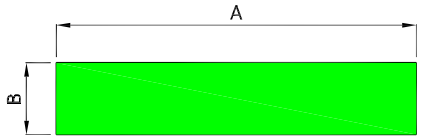

A - WIDTH
B - THICKNESS

SEC NO	A	B	WT/RANGE/12'
1130/A	50.80	15.88	7.600-8.370
1131	50.80	25.40	12.700-13.500
1131/A	50.80	9.50	4.550-5.000
1133	50.80	12.70	6.000-6.700
1143	50.80	19.05	9.100-10.000
1152	52.00	17.00	8.650-8.810
1151	52.25	3.25	1.620-1.720
K7441	55.00	40.00	6.027 kg/m
11109	57.00	3.00	1.518 - 1.822
1164	58.00	8.00	4.380 - 4.780
K6695	60.00	4.00	2.142 - 2.618
1145	60.00	6.00	3.400 - 3.800
K6925	60.00	15.00	8.034 - 9.820
K7442	60.00	55.00	9.041 kg/m
K7827	60.50	10.00	1.632 kg/m
K6948	60.96	6.00	0.991 kg/m
1136	63.00	10.00	5.950-6.550
1134	63.50	6.35	3.800-4.200
1137	63.50	12.70	7.570-8.370
1141	63.50	38.10	22.800-24.800
11106	64.00	14.0	7.900 - 9.480
1165	65.00	10.00	6.200 - 6.600
K6728	68.00	12.00	7.283 - 8.902
1139	74.00	14.00	9.720-10.720
1138	75.00	10.00	7.000-7.800
K6909	75.00	35.00	23.433 - 28.641
1178	75.0	12.00	8.000-9.600
1140	76.20	6.00	4.300-4.730

SEC NO	A	B	WT/RANGE/12'
1142	76.20	12.70	9.100-10.000
1175	76.20	25.40	18.300-20.000
1176	76.20	15.88	12.600-13.900
1146	80.00	14.00	10.520-11.620
1146/A	80.00	10.00	7.600-8.300
K7553	80.00	50.00	10.797 kg/m
K7552	80.00	65.00	14.037 kg/m
1166	85.00	8.00	6.500 - 6.900
1147	100.0	8.00	7.500-8.300
1148	100.0	10.0	9.400-10.400
1179	100.0	12.00	10.670-12.800
K7551	100.00	59.00	15.927 kg/m
1149	101.6	6.35	6.000-6.500
1150	101.6	12.70	12.200-13.400
1180	101.60	15.88	15.200-16.700
1181	101.60	19.05	18.900-19.300
1182	101.60	25.40	25.300-25.700
1183	101.60	50.80	50.500-51.500
11105	105.00	5.0	4.980 - 5.395
11108	107.00	3.00	2.852 - 3.423
11110	110.00	7.90	7.826 - 9.392
1167	112.00	8.00	8.560 - 9.140
K6675	114.00	3.00	3.047 - 3.725
K7374	114.00	8.00	2.498 kg/m
1168	116.00	8.00	8.870 - 9.466
1169	120.0	8.0	10.450 - 11.150
1169/A	120.00	10.00	3.239 kg/m
1154	125.0	12.00	14.100-15.500
1159	125.00	10.00	11.800-12.800

COMMERCIAL
COMMERCIAL

KMC ALUMINIUM

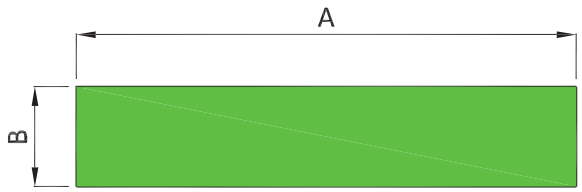

A - WIDTH
B - THICKNESS

SEC NO	A	B	WT/RANGE/12'
1198	125.30	5.00	5.570 - 6.685
1158	127.00	6.35	7.600-8.600
1184	127.00	16.00	19.100-21.000
1185	127.00	20.00	24.800-25.300
1186	127.00	25.40	31.500-32.800
1187	127.00	32.00	39.800-40.600
1188	127.00	40.00	49.700-50.700
1189	127.00	50.80	63.200-65.400
1177	140.0	10.00	12.450-14.940
1170	140 .0	8.0	10.700 - 11.440
1156	150.0	10.00	14.100-15.500
1171	150 .0	12.0	10.700 - 11.440
1190	152.00	25.00	36.500-38.500
1155	152.4	6.35	9.100-10.000
1157	152.4	12.70	18.200-20.000
1191	152.40	19.05	28.400-29.000
1193	160.0	10.00	15.400-16.200
K7350	160.0	25.00	10.959 kg/m
K6579	170.0	10.00	15.175 - 18.547
1192	177.80	12.70	22.000-22.600
1196	180.0	10.0	16.000 - 19.210
1195	190.0	4.0	7.130 - 7.880
1162	200.00	12.00	23.300-24.100
1163	200.00	10.00	18.800-20.700

SEC NO	A	B	WT/RANGE/12'
11194	200.00	6.00	10.673 - 12.807
1194	201.6	6.35	12.200-13.100
1160	203.20	12.70	24.300-26.500
1161	203.20	9.52	18.200-20.000

COMMERCIAL
COMMERCIAL

KMC ALUMINIUM

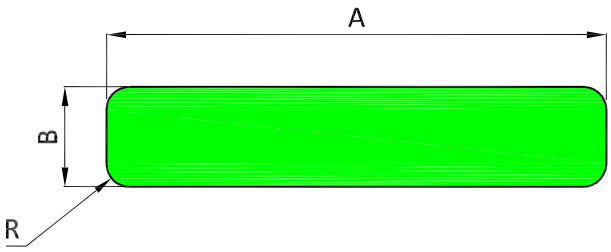

A - WIDTH
B - THICKNESS

SEC NO	A	B	R	WEIGHT (kg/m)
K7819	40.00	29.00	1.00	3.129
K7488	40.00	30.00	2.00	3.23
K7454	45.00	8.00	3.00	0.951
K7722	50.00	8.00	3.00	1.059
K7827	60.50	10.00	0.50	1.632
K6917	85.00	16.00	3.00	3.700
K7818	85.00	74.00	1.00	16.98
K6920	75.00	16.00	3.00	3.266
K7514	63.50	8.00	3.00	1.35
K7649	101.6	15.88	3.00	4.335
K7680	101.6	20.00	3.00	5.465
K7578	102.0	32.90	2.30	9.048
K7655	127.0	20.00	3.00	6.837
K7713	77.85	21.00	8.00	4.265
K7714	98.00	21.00	8.00 / 0.50	5.482

COMMERCIAL
COMMERCIAL

KMC ALUMINIUM

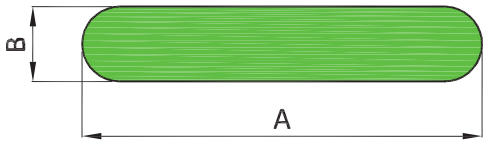

A - WIDTH
B - THICKNESS

SEC NO	A	B	WT/RANGE/12'
6419	9.30	1.20	0.090 - 0.130
6416	10.80	1.20	0.120 - 0.170
1572	15.88	2.03	0.278 - 0.334
1571	20.00	2.50	0.431 - 0.517
1573	36.50	3.20	1.017 - 1.221
1540	38.00	6.00	2.100-2.250
K7303	38.10	8.636	0.857 kg/m
K6822	40.00	20.00	6.390 - 7.810
1545	45.00	5.00	2.170-2.600
1550	50.00	10.00	4.700-4.900
1552	50.00	12.00	5.600-5.800
1549	50.00	5.00	2.175 - 2.610
1567	63.50	6.00	3.319 - 3.983
1564	64.00	14.00	8.400-8.600
1566	64.50	3.00	1.700 - 2.050
1565	65.00	12.00	7.480 - 7.940
1570	70.00	14.00	8.340-10.000
K7516	70.00	20.00	3.779 kg/m
1575	75.00	14.00	9.900-10.100
1577	77.00	13.00	9.500-10.300
1580	80.00	14.00	10.600-11.200
1585	85.00	14.00	11.300-12.300
8195	91.25	34.75	24.832 - 29.798
1569	100.00	3.00	2.648 - 3.178
1568	120.00	3.50	3.712 - 4.454

COMMERCIAL
COMMERCIAL

KMC ALUMINIUM

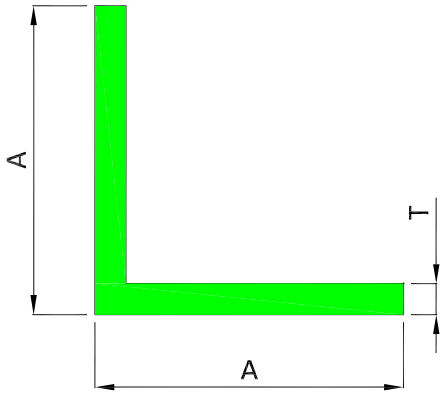

A - WIDTH / HEIGHT
T - THICKNESS

SEC NO	A	T	WT/RANGE/12'
K7993	5.00	1.35	0.031 kg/m
1312	12.00	0.70	0.140 - 0.170
1317	19.00	0.65	0.215 - 0.260
1318	18.00	1.50	0.500 - 0.700
1319	19.00	2.00	0.700 - 0.900
K7940	25.25	1.35	0.178 kg/m
1320	25.40	0.70	0.350 - 0.450
1321	25.40	0.95	0.450 - 0.550
1322	25.40	1.10	0.550 - 0.650
1323	25.40	1.35	0.700 - 0.800
1324	25.40	1.60	0.800 - 0.950
1328	25.40	1.35	1.100 - 1.300
1329	25.40	3.00	1.300 - 1.500
1329/A	25.40	3.40	1.510 - 1.665
1332	31.90	2.80	1.650 - 1.850
1338	38.00	1.45	1.000 - 1.100
1341	38.10	1.60	1.100 - 1.300
1344	38.10	2.30	1.600 - 1.900
1346	38.10	3.00	2.000 - 2.300
1349	38.10	4.75	3.200 - 3.500
1351	38.10	6.00	4.000 - 4.300
1352	40.00	6.00	4.385 - 4.823
K6763	44.00	1.50	1.159 - 1.417
1350	50.00	2.00	2.000 - 2.400
1365	50.00	4.70	3.982 - 4.779
1353	50.00	4.50	3.818 - 4.666
1366	50.80	6.35	5.800 - 6.200

SEC NO	A	T	WT/RANGE/12'
1367	50.80	3.00	2.700 - 3.100
1360	60.00	4.00	4.375 - 4.800
1363	63.50	2.00	3.360 - 4.000
1354	63.50	6.00	6.453 - 7.887
1375	75.00	6.00	8.000 - 8.500
1376	75.00	10.00	13.700 - 14.500
1339	100.0	3.00	5.047 - 6.309

COMMERCIAL
COMMERCIAL

KMC ALUMINIUM

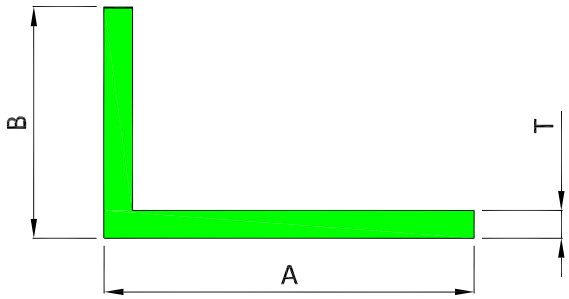

A - WIDTH
B - HEIGHT
T - THICKNESS

SEC NO	A	B	T	WT/RANGE/12'
1410	10.00	6.00	1.00	0.150 - 0.225
1418	18.50	12.00	1.85	0.470 - 0.565
1419	19.0	12.50	0.65	0.175 - 0.215
1426	25.00	15.00	2.00	0.740 - 0.940
1427	25.00	20.00	2.00	0.900 - 1.050
K7524	25.40	19.05	3.18	0.354 kg/m
1430	30.00	20.00	2.20	0.950 - 1.150
K7251	35.00	12.00	2.00	0.246 kg/m
1425	25.40	12.70	1.30	0.450 - 0.550
1440	40.00	18.00	2.50	1.350 - 1.550
1452	38.10	25.40	2.20	1.300 - 1.500
1454	38.10	25.40	2.85	1.600 - 1.800
1445	45.00	35.00	2.00	1.500 - 1.700
1446	40.00	45.00	6.00	3.768 - 4.522
1450	50.00	25.00	2.80	2.050 - 2.350
1451	38.10	25.40	2.00	1.100 - 1.300
K6737	50.00	30.00	3.00	2.052 - 2.508
1453	50.00	38.00	3.00	2.270 - 2.720
1497	50.00	100.50	6.00	7.710 - 9.250
1455	55.00	45.00	4.00	3.410 - 4.170
1435	55.00	35.00	2.50	1.897-2.277
7203	60.00	50.00	2.70	2.650 - 3.100
1466	66.00	33.00	6.00	5.400 - 6.000
1475	75.00	25.00	3.00	2.850 - 3.250
1476	76.20	50.80	6.35	7.400 - 8.100
1485	85.00	25.00	2.50	2.500 - 2.800
1498	100.00	45.00	4.00	5.000- 6.100
1499	100.50	50.00	5.00	6.490 - 7.790
K7689	120.0	50.00	5.00	2.227 kg/m

COMMERCIAL
COMMERCIAL

KMC ALUMINIUM

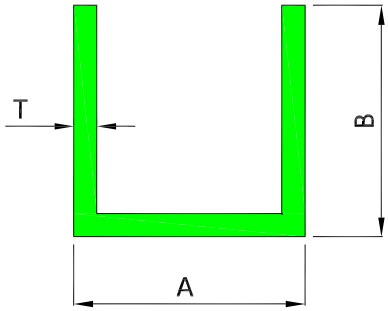

A - WIDTH
B - HEIGHT
T - THICKNESS

SEC NO	A	B	T	WT/RANGE/12'
2081	9.30	9.40	0.70	0.165-0.200
2079	11.50	11.50	0.80	0.230-0.280
2085	12.00	12.00	0.90	0.270-0.330
K7440	12.00	12.00	1.25	0.114 kg/m
K7839	15.00	15.00	3.00	0.315 kg/m
6321	16.30	16.0	1.40	0.600 - 0.750
2030	21.50	30.00	2.00	1.375-1.675
K7790	22.00	25.00	1.20	0.225 kg/m
8609	31.5	40.00	2.00	1.907-2.289
3902	33.89	14.96	2.00	1.075 - 1.275
2087	45.00	22.00	0.70	0.465-0.740
2050	50.00	50.00	3.80	4.830-5.900
2052	50.00	25.00	1.20	1.040-1.270
2053	50.00	25.00	3.00	2.500-3.060
2056	56.00	50.00	3.00	4.000 - 4.800
8628	60.00	80.00	5.00	9.335-11.202
8629	60.00	110.00	5.00	12.003-14.402
K6663	63.00	10.00	5.00	0.722 - 0.882
2092	70.00	30.00	4.00	4.338 - 5.205
3106	101.00	39.80	2.90	4.500-5.500
K8035	148.40	38.10	13.95	2.519 kg/m

COMMERCIAL
COMMERCIAL

KMC ALUMINIUM

FLUTED PIPE

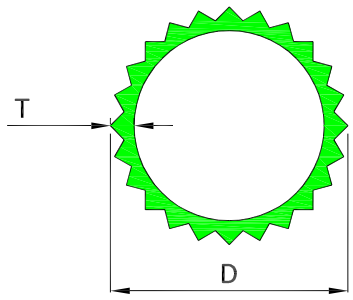

D - OUTER DIAMETER
T - THICKNESS

SEC NO	D	T	WT/RANGE/12'
1515H	24.00	0.55	0.450 - 0.550
1524	25.00	2.23	1.170-1.430
1525	25.00	1.15	0.500 - 0.600
1527	25.00	1.30	0.670 - 0.800
1526	25.20	3.00	1.600 - 1.930
K7841	30.00	2.50	0.515 kg/m
1531	30.80	5.00	3.274 - 3.929

RECTANGULAR TUBE WITH C.RADIUS

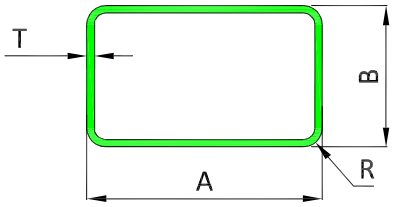

A - WIDTH
B - HEIGHT
T - THICKNESS
R - RADIUS

SEC NO	A	B	T	R	WT/RANGE/12'
1961	61.00	26.00	1.50	3.00	2.400-2.800
K6646	65.00	24.00	1.20	5.30	1.769 - 2.162
1972	72.00	25.00	1.50	3.00	2.650-2.950

COMMERCIAL

COMMERCIAL

ALL DIMENSIONS ARE IN MM

KMC ALUMINIUM

COMMERCIAL

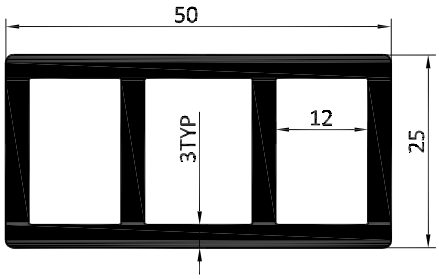

SEC NO	WT/RANGE/12'
8922	4.687 - 5.624

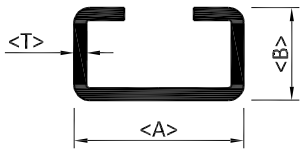

SEC NO	A	B	T	WT/RANGE/12'
2153	22.22	12.00	0.85	0.400-0.500
2159	22.22	12.00	1.40	0.750 - 0.800

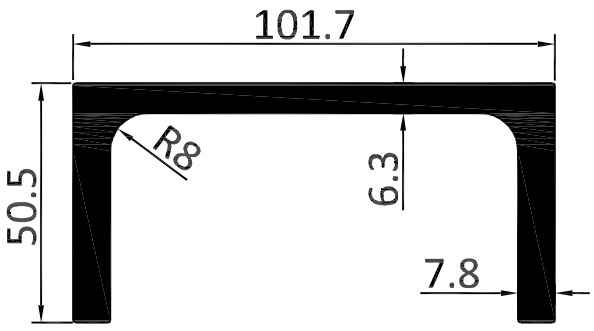

SEC NO	WT/RANGE/12'
7409	12.000 - 14.485

COMMERCIAL

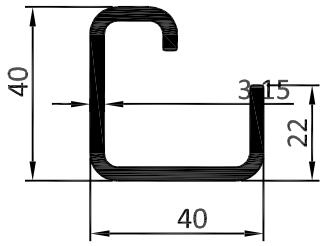

SEC NO	WT/RANGE/12'
8014	3.260-3.700

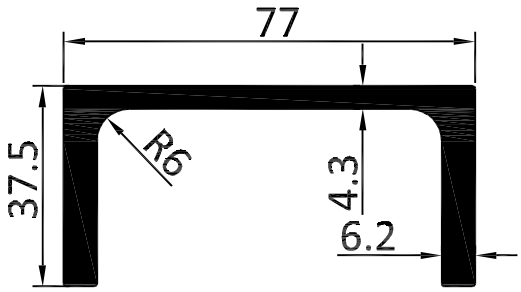

SEC NO	WT/RANGE/12'
7410	6.740 - 8.100

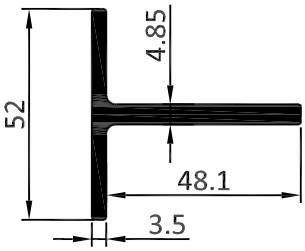

SEC NO	WEIGHT kg/m
3119	1.132

COMMERCIAL

COMMERCIAL

KMC ALUMINIUM

COMMERCIAL

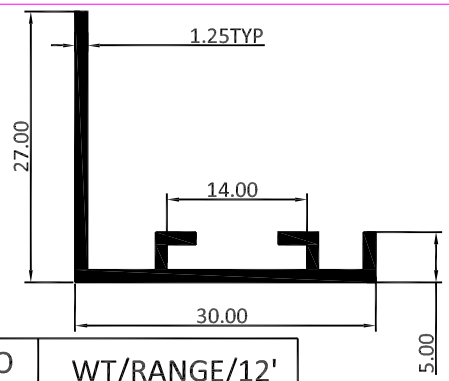

SEC NO	WT/RANGE/12'
5303	0.800- 0.960

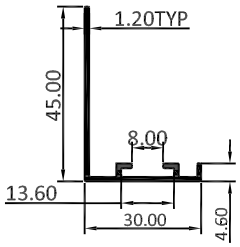

SEC NO	WT/RANGE/12'
5301	0.948- 1.138

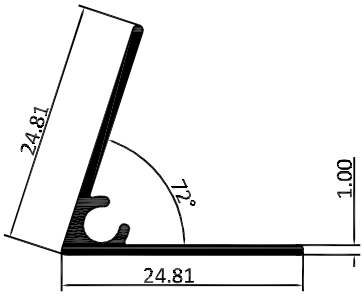

SEC NO	WT/RANGE/12'
5302	0.497- 0.596

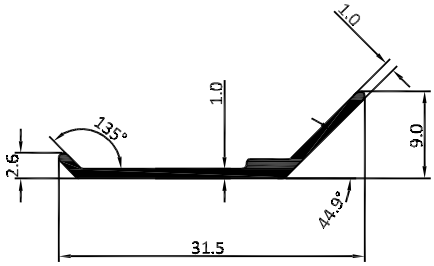

SEC NO	WT/RANGE/12'
5304	0.342- 0.411

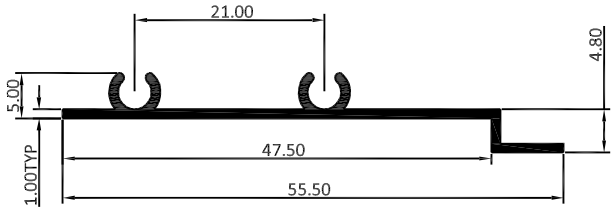

SEC NO	WT/RANGE/12'
5313	0.681 - 0.818

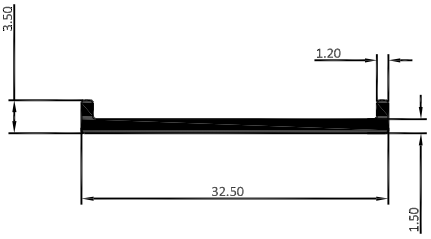

SEC NO	WT/RANGE/12'
5315	0.474- 0.379

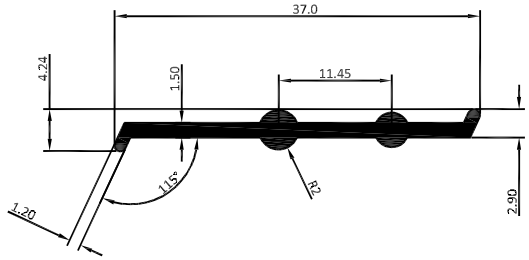

SEC NO	WT/RANGE/12'
5316	0.602- 0.723

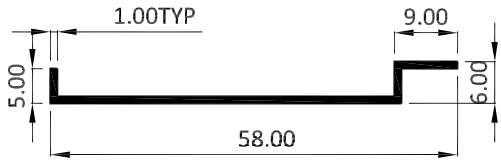

SEC NO	WT/RANGE/12'
5314	0.592 - 0.711

COMMERCIAL

ALL DIMENSIONS ARE IN MM

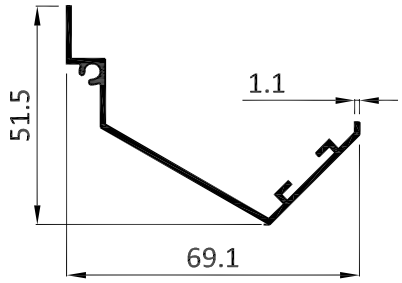

SEC NO	WT/RANGE/12'
6046	1.320-1.580

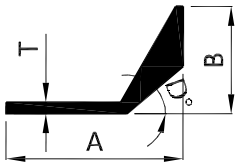

SEC NO	A	B	D°	T	WT/RANGE/12'
6034	15.70	7.90	30	1.00	0.240 - 0.330
7019	15.70	7.30	23	1.00	0.300-0.370
7020	15.70	9.50	40	0.90	0.260-0.320
8022	15.70	6.43	16	0.85	0.230 - 0.290

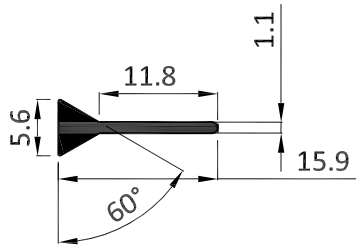

SEC NO	WT/RANGE/12'
7021	0.240-0.290

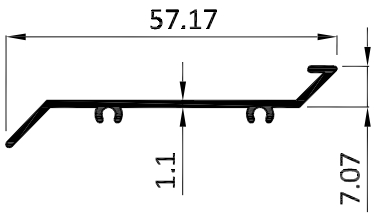

SEC NO	WT/RANGE/12'
6047	0.750-0.910

COMMERCIAL

COMMERCIAL

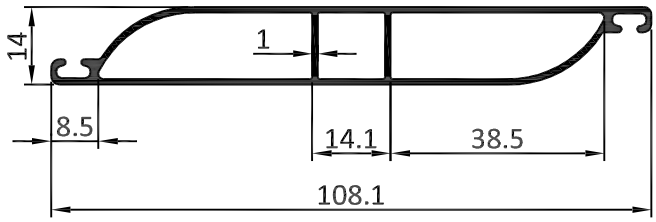

SEC NO	WEIGHT (kg/m)
6149	0.696

SEC NO	WEIGHT (kg/m)
6150	0.993

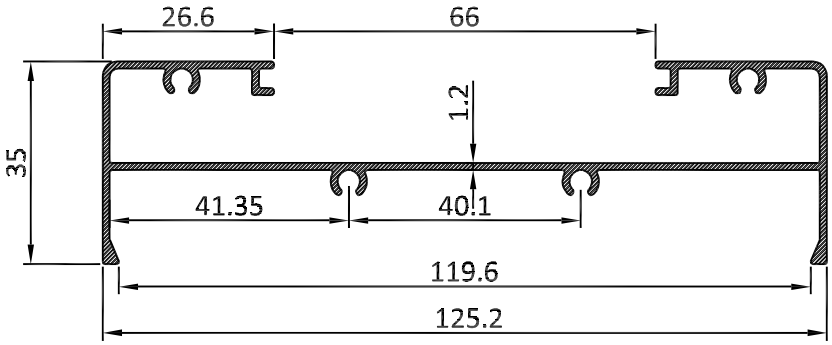

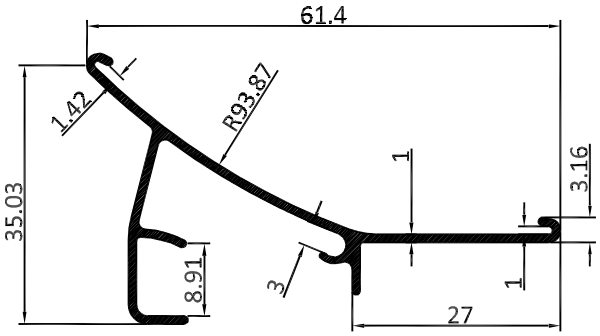

SEC NO	WEIGHT (kg/m)
8212	0.340

COMMERCIAL

COMMERCIAL

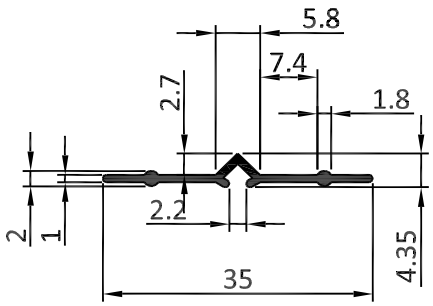

SEC NO	WEIGHT (kg/m)
9046	0.112

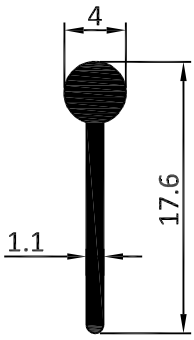

SEC NO	WEIGHT (kg/m)
9047	0.074

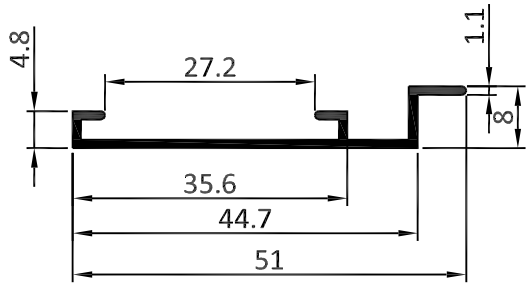

SEC NO	WEIGHT (kg/m)
9048	0.211

COMMERCIAL

COMMERCIAL

KMC ALUMINIUM

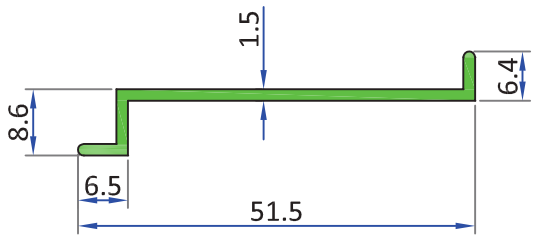

SEC NO	WEIGHT (kg/m)
9049	0.255

COMMERCIAL

COMMERCIAL

KMC ALUMINIUM

COMMERCIAL

COMMERCIAL

RUNNER 15MM SERIES

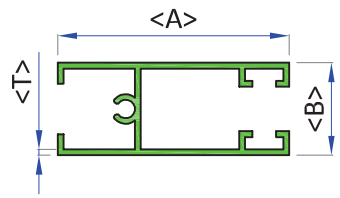

SEC NO	A	B	T	WT/RANGE/12'
2950	37.50	15.00	0.90	1.000 - 1.200
2951	37.50	15.00	1.10	1.300 - 1.500
2952	37.50	15.00	1.45	1.600 - 1.800

INTER LOCK 15MM SERIES

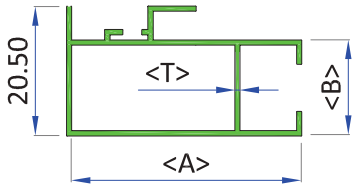

SEC NO	A	B	T	WT/RANGE/12'
2954	37.50	15.00	0.70	1.000 - 1.200
2955	37.50	15.00	0.95	1.300 - 1.500
2956	37.50	15.00	1.20	1.600 - 1.800

TRACK 15MM SERIES

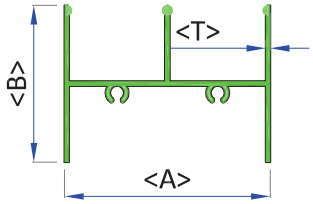

SEC NO	A	B	T	WT/RANGE/12'
2959	44.50	34.00	1.00	1.250 - 1.500
2960	44.50	34.00	1.60	1.700 - 1.900
2961	44.50	34.00	1.20	1.500 - 1.700

ONE SIDE OPEN

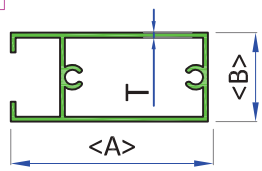

SEC NO	A	B	T	WT/RANGE/12'
2962	40.00	18.00	0.85	1.000-1.200
2965	40.00	18.00	1.35	1.600 - 1.800
2966	40.00	18.00	1.50	1.800 - 2.000
6066	49.8	18.00	1.20	1.57-2.020

INTER LOCK

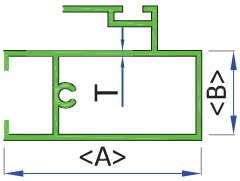

SEC NO	A	B	T	WT/RANGE/12'
2969	40.00	18.00	0.90	1.200 - 1.400
2971	40.00	18.00	1.05	1.600 - 1.800
2972	40.00	18.00	1.40	2.000 - 2.400

BOTH SIDE OPEN

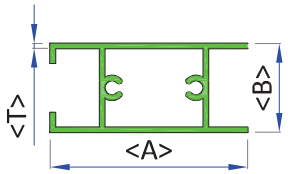

SEC NO	A	B	T	WT/RANGE/12'
2974	40.00	18.00	0.90	1.000 - 1.200
2975	40.00	18.00	0.60	0.800 - 0.850
2977	40.00	18.00	1.35	1.600 - 1.800
2978	40.00	18.00	1.55	1.800 - 2.100

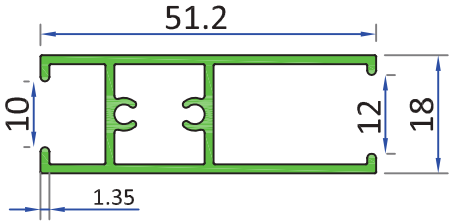

SEC NO	WT/RANGE/12'
7407	1.920 - 2.120

TRACK SIDE

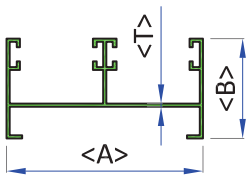

SEC NO	A	B	T	WT/RANGE/12'
2987	62.20	31.60	0.75	1.450 - 1.650
2988	62.20	31.60	0.96	1.800 - 2.000
2989	62.20	31.60	1.04	2.000 - 2.300
2990	62.20	31.60	1.20	2.300 - 2.500
3908	83.00	40.00	1.50	3.000 - 3.670

TWO TRACK BOTTOM

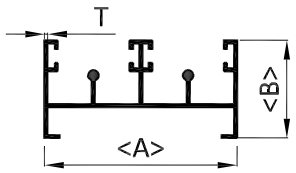

SEC NO	A	B	T	WT/RANGE/12'
2993	62.00	32.00	0.70	1.400 - 1.600
2994	62.00	32.00	0.83	1.900 - 2.100
2995	62.20	31.60	1.05	2.100 - 2.400
2996	62.20	31.60	1.16	2.400 - 2.800

THREE TRACK SIDE

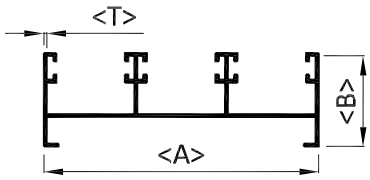

SEC NO	A	B	T	WT/RANGE/12'
3002	92.00	31.60	1.00	2.500 - 2.800
3004	92.00	31.60	1.30	3.200 - 3.600

TWO TRACK GUTTER BOTTOM

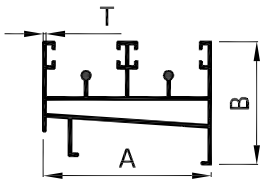

SEC NO	A	B	T	WT/RANGE/12'
2999	62.20	45.50	1.1	2.900 -3.200

THREE TRACK BOTTOM

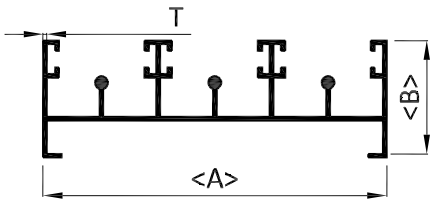

SEC NO	A	B	T	WT/RANGE/12'
3008	92.00	31.60	1.00	2.900 - 3.300
3010	92.00	31.60	1.30	4.100 - 4.400

COMMERCIAL

COMMERCIAL

KMC ALUMINIUM

COMMERCIAL

COMMERCIAL

TWO TRACK BOTTOM

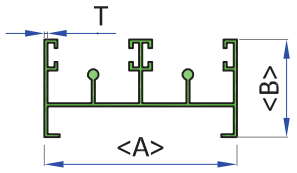

SEC NO	A	B	T	WT/RANGE/12'
2993	62.00	32.00	0.70	1.400 - 1.600
2994	62.00	32.00	0.83	1.900 - 2.100
2995	62.20	31.60	1.05	2.100 - 2.400
2996	62.20	31.60	1.16	2.400 - 2.800

TWO TRACK GUTTER BOTTOM

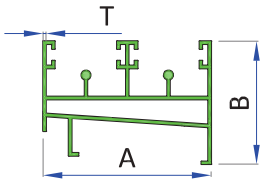

SEC NO	A	B	T	WT/RANGE/12'
2999	62.20	45.50	1.1	2.900 -3.200

THREE TRACK SIDE

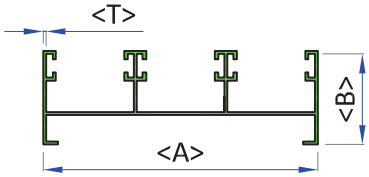

SEC NO	A	B	T	WT/RANGE/12'
3002	92.00	31.60	1.00	2.500 - 2.800
3004	92.00	31.60	1.30	3.200 - 3.600

THREE TRACK BOTTOM

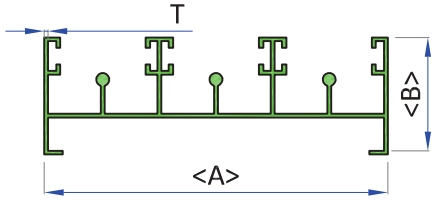

SEC NO	A	B	T	WT/RANGE/12'
3008	92.00	31.60	1.00	2.900 - 3.300
3010	92.00	31.60	1.30	4.100 - 4.400

THREE TRACK GUTRACK

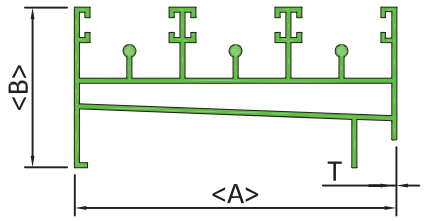

SEC NO	A	B	T	WT/RANGE/12'
3013	92.00	45.5	1.20	4.500-5.000

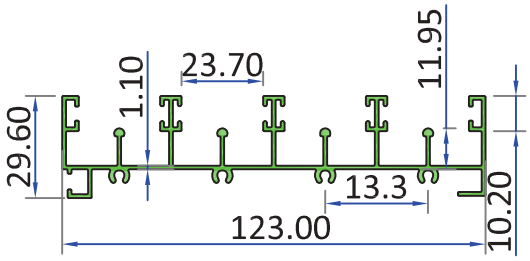

SEC NO	WT/RANGE/12'
3262	4.230 - 5.080

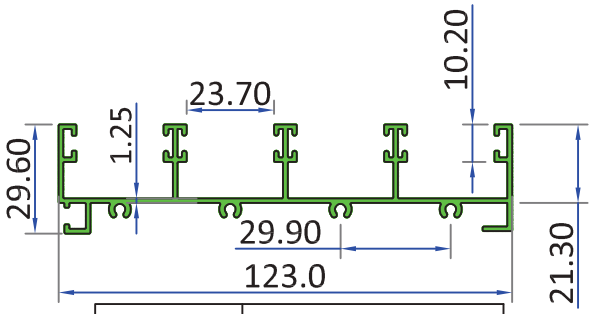

SEC NO	WT/RANGE/12'
3261	4.080 - 4.890

SHUTTER PLAIN

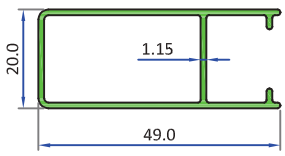

SEC NO	WT/RANGE/12'
3028	1.410-1.722

COMMERCIAL

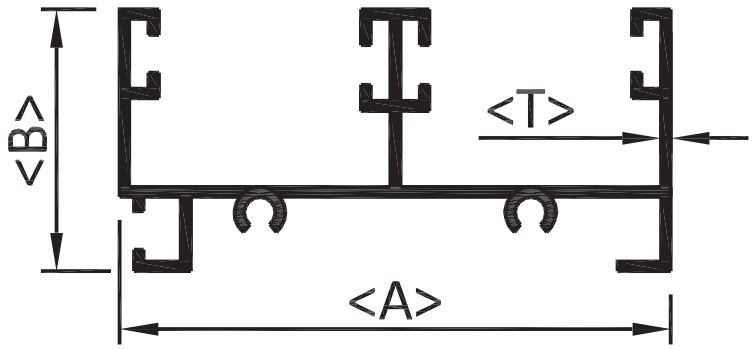

SECNO	A	B	T	WT/RANGE/12'
3040	62.00	29.50	0.90	1.800 - 1.980
3041	62.00	29.50	1.18	2.280 - 2.500
3042	62.00	29.50	1.30	2.570 - 2.825

COMMERCIAL

KMC ALUMINIUM

COMMERCIAL

COMMERCIAL

THREE TRACK SIDE

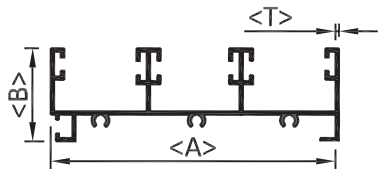

SECNO	A	B	T	WT/RANGE/12'
3048	92.36	29.70	1.18	3.140-3.840

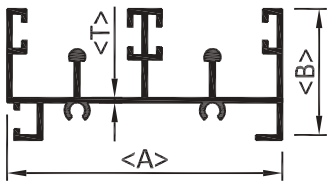

SECNO	A	B	T	WT/RANGE/12'
3043	62.00	29.50	0.90	2.100 - 2.310
3044	62.00	29.50	1.15	2.520 - 2.770
3045	62.00	29.50	1.30	2.800 - 3.080

THREE TRACK BOTTOM

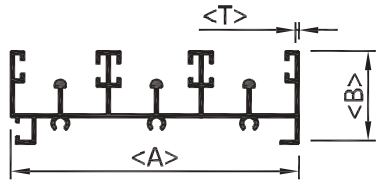

SECNO	A	B	T	WT/RANGE/12'
3050	92.36	29.70	1.18	3.640-4.500

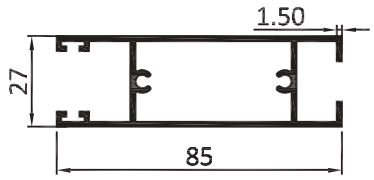

SEC NO	WT/RANGE/12'
5034	3.540-4.320

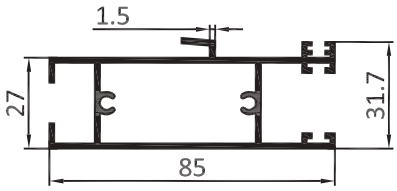

SEC NO	WT/RANGE/12'
5035	4.040-4.610

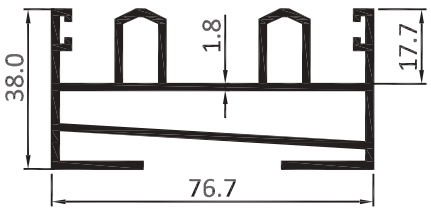

SEC NO	WT/RANGE/12'
5041	5.450-6.090

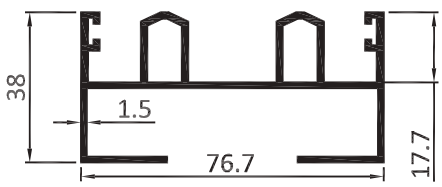

SEC NO	WT/RANGE/12'
5040	4.000-4.400

KMC ALUMINIUM

COMMERCIAL

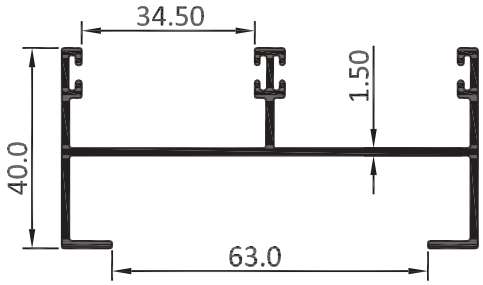

SEC NO	WT/RANGE/12'
3908	3.000 - 3.670

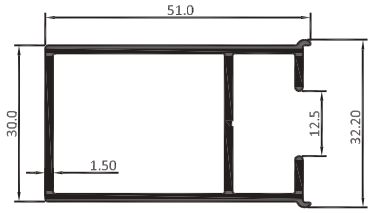

SEC NO	WT/RANGE/12'
3911	2.250 - 2.780

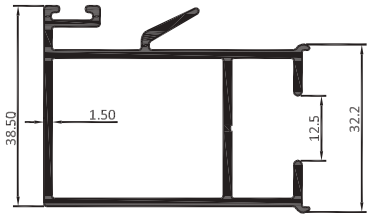

SEC NO	WT/RANGE/12'
3910	2.700 - 3.350

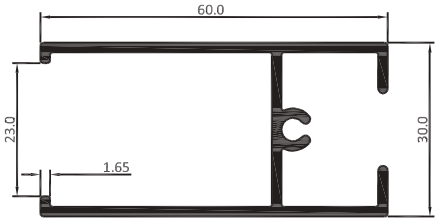

SEC NO	WT/RANGE/12'
3907	2.570 - 2.860

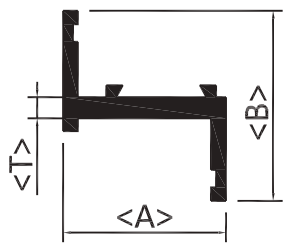

	A	B	T	WT/RANGE/12'
3202	33.0	38.50	2.30	1.450-1.770
3204	33.0	38.50	3.00	1.780-2.170
3205	33.0	38.50	4.30	2.290-2.800

KMC ALUMINIUM

COMMERCIAL

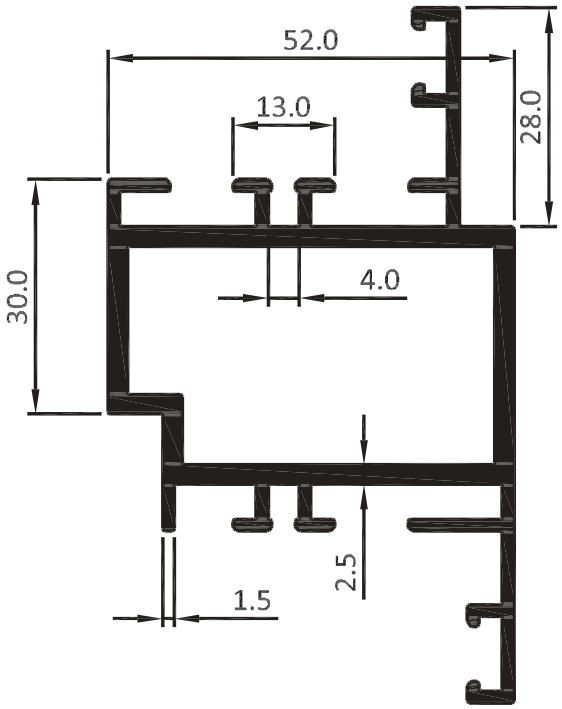

SEC NO	WT/RANGE/12'
8298	5.580 - 6.696

COMMERCIAL

COMMERCIAL

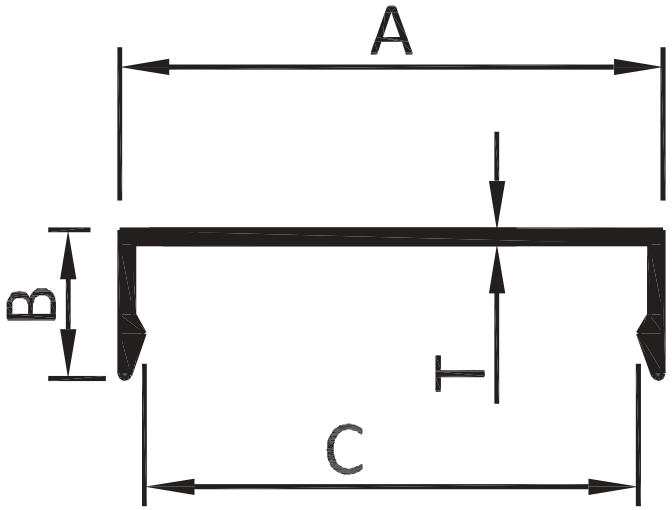

SEC NO	A	B	C	T	WT/RANGE/12'
7073	55.0	15.0	50.0	1.80	1.300-1.600

COMMERCIAL

COMMERCIAL

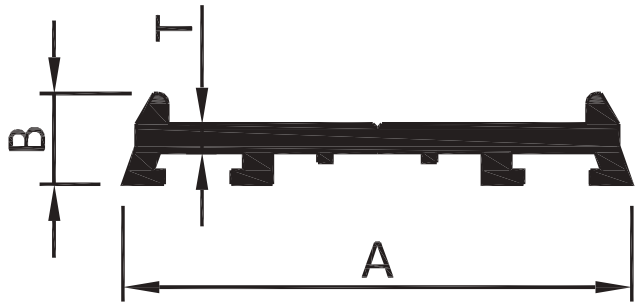

SEC NO	A	B	T	WT/RANGE/12'
7072	53.45	9.5	4.0	2.050-2.400

COMMERCIAL

KMC ALUMINIUM

COMMERCIAL

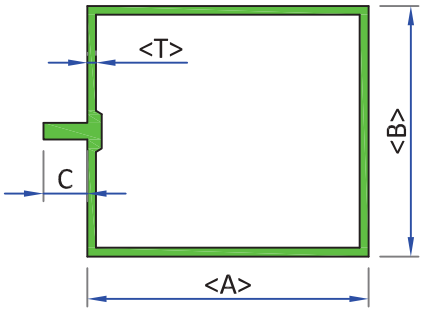

SEC NO	A	B	C	T	WT/RANGE/12'
4590	118	57.00	18.00	2.00	6.300 - 7.300
4592	45.00	45.00	6.00	1.10	1.800 - 2.200
4597	95.00	57.00	26.00	2.50	9.100 - 9.500
4598	64.00	57.00	10.00	2.00	4.900 - 5.400
4599	100.00	57.00	10.00	2.00	6.000 - 6.500
4575	65.00	57.40	13.50	3.50	7.747- 9.296
45150	140.00	57.40	13.50	3.50	12.415-14.898

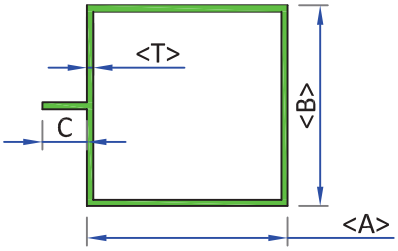

SEC NO	A	B	C	T	WT/RANGE/12'
4591	45.00	45.00	10.00	1.40	2.400 - 2.800
4592	45.00	45.00	6.00	1.10	1.800 - 2.200
4596	70.00	58.00	27.00	2.00	5.150 - 5.700

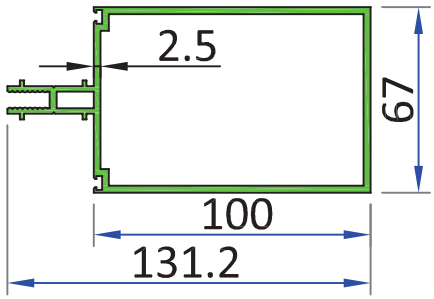

SEC NO	A	B	T	WT/RANGE/12'
5053	131.2	67.0	2.50	9.500 - 10.000
5068	131.2	67.00	2.0	7.420 - 8.710

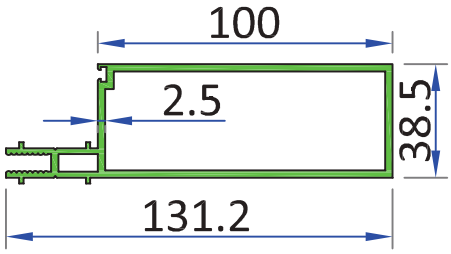

SEC NO	A	B	T	WT/RANGE/12'
5054	131.16	38.50	2.50	8.500 - 9.000
5069	131.16	38.5	2.0	6.030 - 7.750

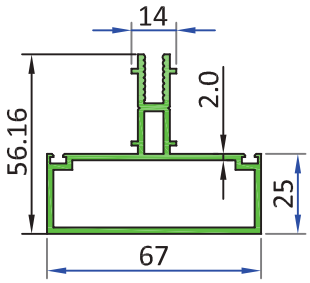

SEC NO	WT/RANGE/12'
5058	5.100-5.300

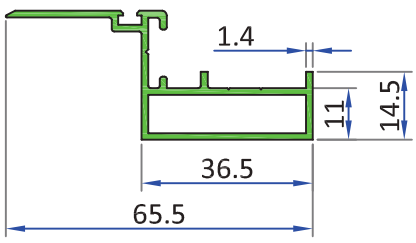

SEC NO	WT/RANGE/12'
5059	2.100-2.350

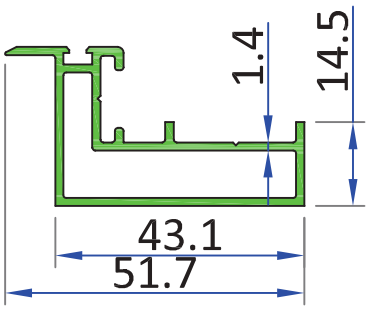

SEC NO	WT/RANGE/12'
5056	2.200-2.600

COMMERCIAL

KMC ALUMINIUM

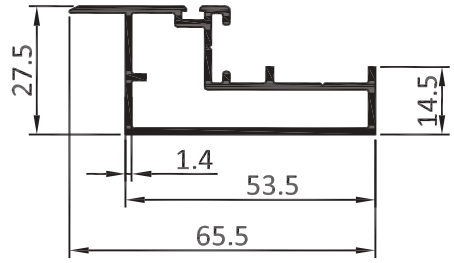

SEC NO	WT/RANGE/12'
5066	2.600-2.800

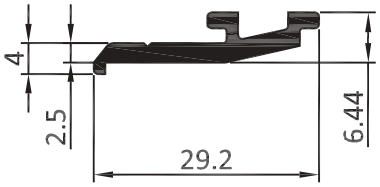

SEC NO	WT/RANGE/12'
5067	0.850-1.100

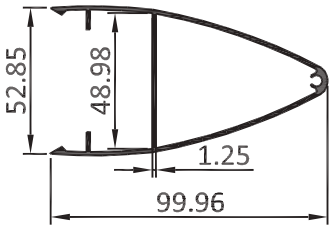

SEC NO	WT/RANGE/12'
6014	3.120-4.000

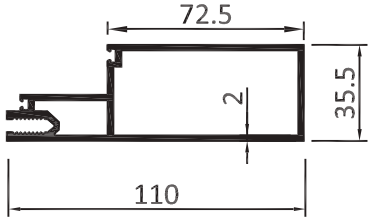

SEC NO	WT/RANGE/12'
6054	6.100-7.100

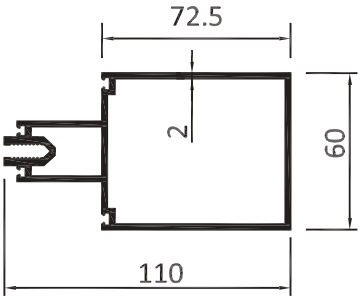

SEC NO	WT/RANGE/12'
6053	7.400-8.600

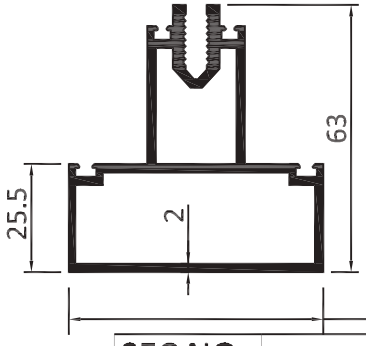

SEC NO	WT/RANGE/12'
6056	5.400-6.600

COMMERCIAL

COMMERCIAL

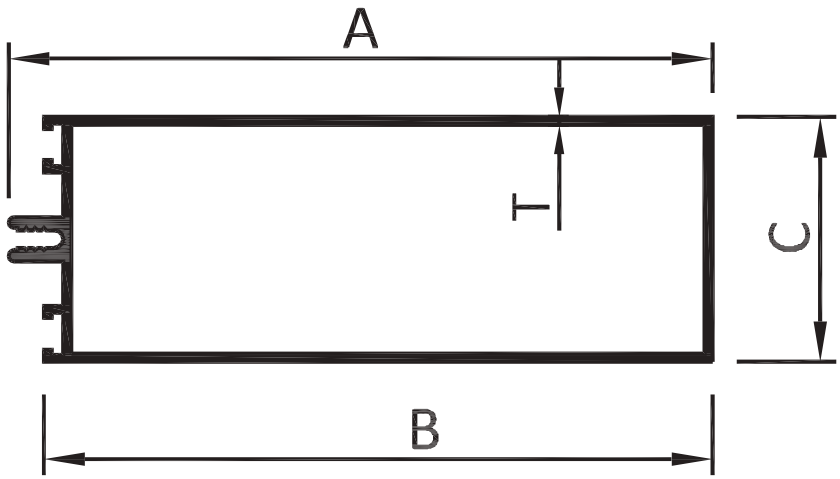

SEC NO	A	B	C	T	WT/RANGE/12'
6229	158.25	150.25	55.00	1.8	7.400-8.800
6230	158.25	150.25	55.00	2.8	11.000-12.700

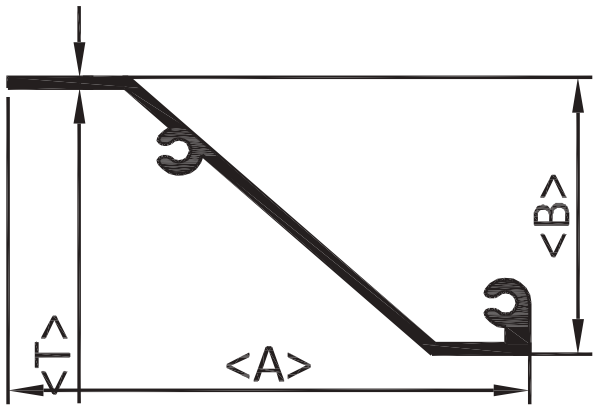

SEC NO	A	B	T	WT/RANGE/12'
4651	64.00	34.00	1.30	1.100-1.300

COMMERCIAL

COMMERCIAL

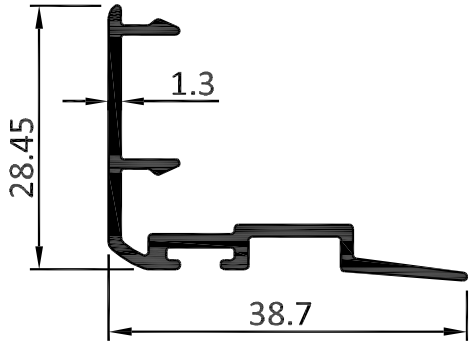

SEC NO	WT/RANGE/12'
9004	1.050-1.220

COMMERCIAL

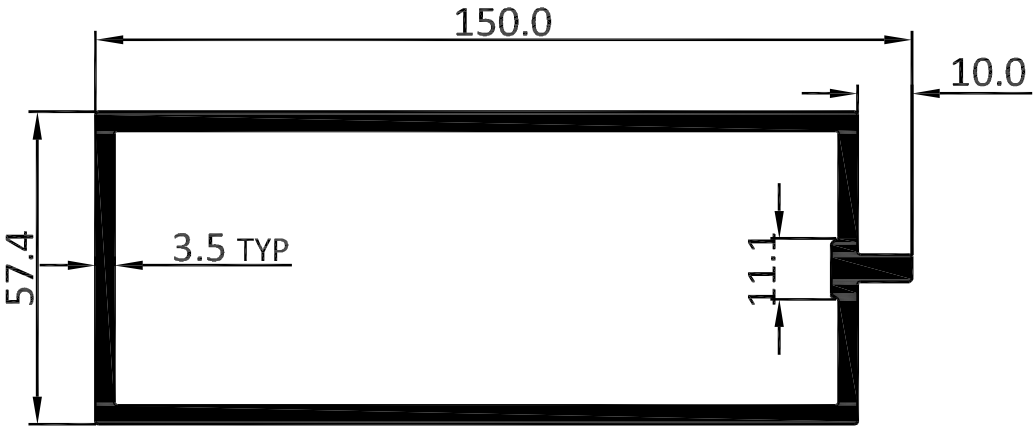

SEC NO	WT/RANGE/12'
45150	12.415- 14.898

COMMERCIAL

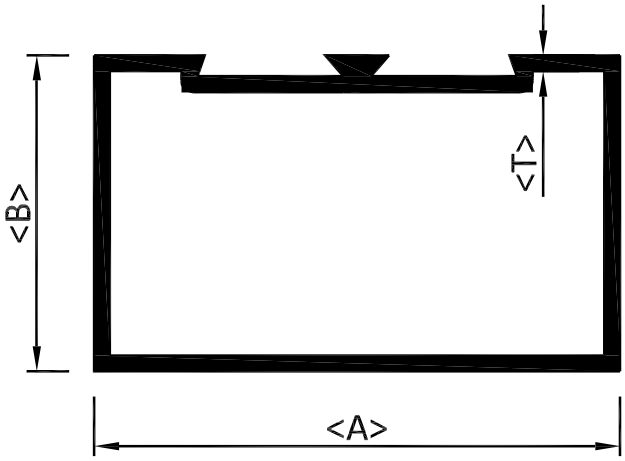

SEC NO	A	B	T	WT/RANGE/12'
2617	63.50	38.10	0.66	1.400 - 1.600
2618	63.50	38.10	0.77	1.600- 1.800
2619	63.50	38.10	0.87	1.800 - 2.000
2620	63.50	38.10	0.97	2.000 - 2.200
2621	63.50	38.10	1.07	2.200 - 2.400
2622	63.50	38.10	1.18	2.400 - 2.600
2623	63.50	38.10	1.28	2.600 - 2.800
2624	63.50	38.10	1.38	2.800 - 3.000
2625	63.50	38.10	1.49	3.000 - 3.200
2626	63.50	38.10	1.59	3.200 - 3.400
2627	63.50	38.10	1.66	3.400 - 3.600
2628	63.50	38.10	1.76	3.600 - 3.800
2629	63.50	38.10	1.87	3.800 - 4.000
2659	101.6	44.45	1.25	3.370 - 4.120
2661	101.6	44.45	1.65	4.380 - 5.350
2664	101.6	44.45	1.95	5.410-5.955
2666	101.6	44.45	2.20	6.070 - 6.675
2668	101.6	44.45	2.45	6.715 - 7.385

COMMERCIAL

COMMERCIAL

COMMERCIAL

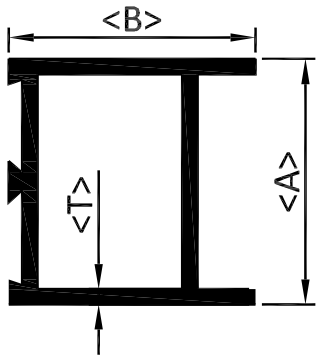

SEC NO	A	B	T	WT/RANGE/12'
2701	47.00	44.40	1.00	2.000 - 2.300
2703	44.50	47.00	1.40	2.600 - 2.900
2705	47.00	44.40	1.70	3.500 - 4.000
2707	47.00	44.40	2.50	4.500 - 4.900

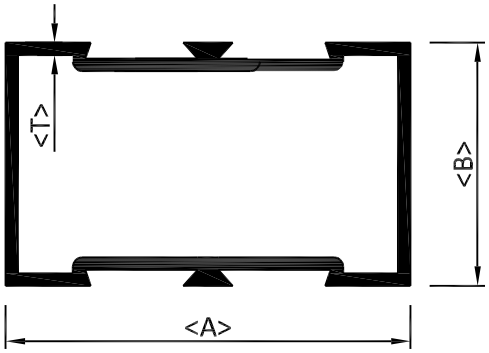

SEC NO	A	B	T	WT/RANGE/12'
2634	63.50	38.10	0.77	1.800 - 2.000
2635	63.50	38.10	0.87	2.000 - 2.200
2636	63.50	38.10	0.97	2.200 - 2.400
2637	63.50	38.10	1.07	2.400 - 2.600
2638	63.50	38.10	1.17	2.600 - 2.800
2639	63.50	38.10	1.27	2.800 - 3.000
2640	63.50	38.10	1.37	3.000 - 3.200
2641	63.50	38.10	1.47	3.200 - 3.400
2642	63.50	38.10	1.57	3.400 - 3.600
2643	63.50	38.10	1.68	3.600 - 3.800
2645	63.50	38.10	1.78	3.800 - 4.000
2672	101.6	44.45	1.30	3.885 - 4.270
2674	101.6	44.45	1.45	4.290 - 4.720
2676	101.6	44.45	1.62	4.750 - 5.225
2678	101.6	44.45	1.85	5.360 - 5.895
2680	101.6	44.45	2.1	6.025 - 6.625
5043	63.50	38.10	1.70	3.380-4.130

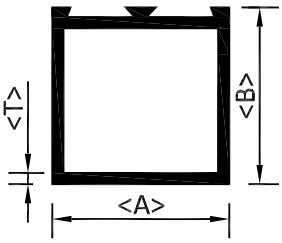

SEC NO	A	B	T	WT/RANGE/12'
2730	47.00	44.45	1.00	2.000 - 2.400
2732	47.00	44.45	1.50	2.600 - 3.000
2737	83.50	44.45	1.50	3.900 - 4.300

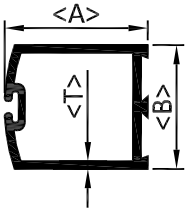

SEC NO	A	B	T	WT/RANGE/7'
2711	47.50	44.45	0.95	1.000 - 1.200
2712	47.50	44.45	1.20	1.300 - 1.500
2714	47.50	44.45	1.45	1.600 - 1.800
2717	47.50	44.45	1.70	1.800 - 2.000
2718	47.50	44.45	2.00	2.000 - 2.400
2719	85.00	44.45	1.00	2.600 - 2.900

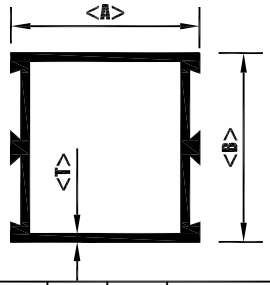

SEC NO	A	B	T	WT/RANGE/12'
2742	47.00	44.45	0.83	2.200 - 2.300
2744	47.00	44.45	1.20	2.600 - 2.900
2749	47.00	44.45	2.60	4.500 - 5.000
2752	83.50	44.45	1.40	3.900 - 4.300

COMMERCIAL

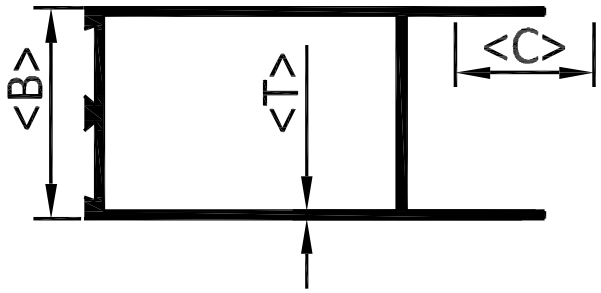

SEC NO	A	B	C	T	WT/RANGE/12'
2755	95.25	44.45	25.40	0.85	2.400 - 2.700
2756	95.25	44.45	25.40	1.00	3.000 - 3.500
2757	95.25	44.45	25.40	1.25	3.500 - 3.900
2762	95.25	44.45	25.40	2.00	5.500 - 6.000
2767	114.00	44.45	25.40	1.35	3.800 - 4.200
2770	114.00	44.45	25.40	2.10	7.000 - 7.400

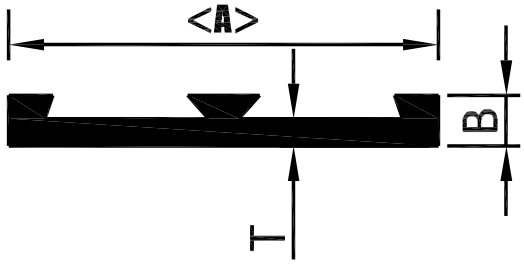

SEC NO	A	B	T	WT/RANGE/12'
2789	44.00	3.40	0.45	0.420 - 0.505
2790	44.00	3.40	0.80	0.580 - 0.650
2791	44.00	3.40	1.00	0.690 - 0.790

COMMERCIAL

COMMERCIAL

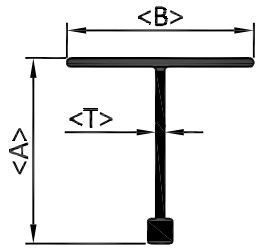

SEC NO	A	B	T	WT/RANGE/12'
2204	25.40	25.40	0.85	0.375 - 0.425
2240	38.00	25.00	1.30	0.800 - 0.900

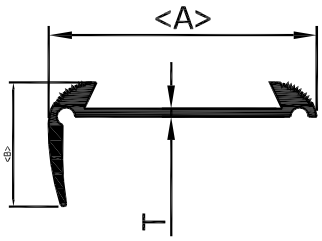

SEC NO	A	B	T	WT/RANGE/12'
6003	38.45	17.84	1.17	0.775-0.975

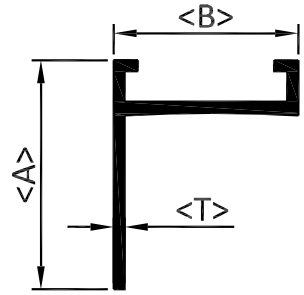

SEC NO	A	B	T	WT/RANGE/12'
6004	33.00	26.60	1.60	1.000-1.200

COMMERCIAL

COMMERCIAL

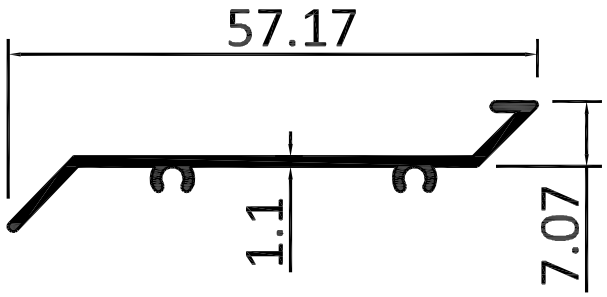

SEC NO	WT/RANGE/12'
6047	0.750-0.910

COMMERCIAL

COMMERCIAL

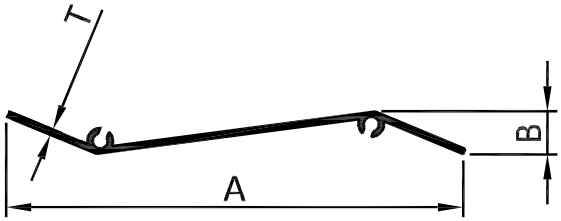

SEC NO	A	B	T	WT/RANGE/12'
4650	116.80	15.50	1.80	2.400-2.670
4650/L	116.80	15.50	1.50	1.900-2.100

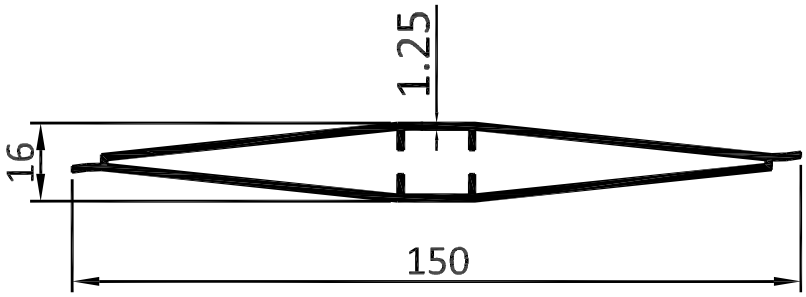

SEC NO	WT/RANGE/12'
6011	3.500-4.100

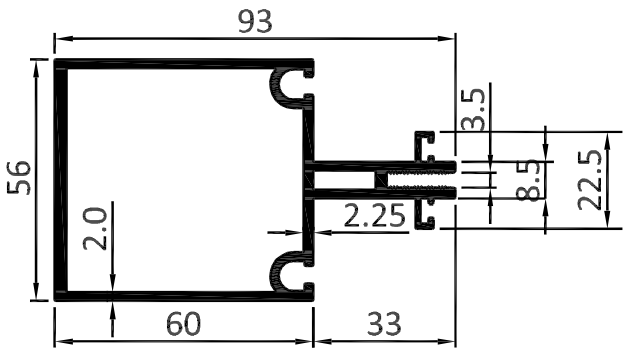

SEC NO	WT/RANGE/12'
8134	6.470 - 7.770

COMMERCIAL

COMMERCIAL

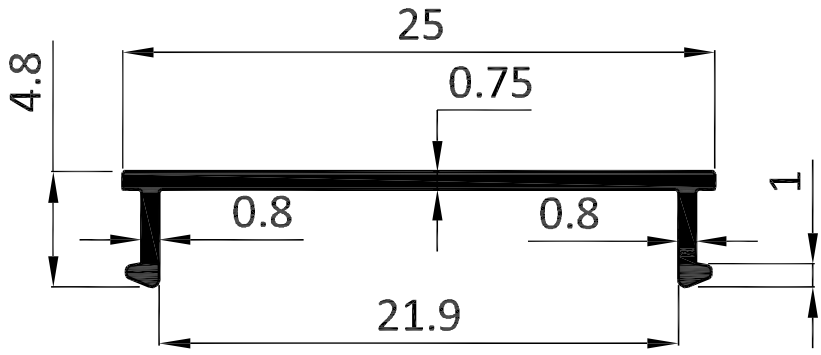

SEC NO	WEIGHT kg/m
K6475	0.070

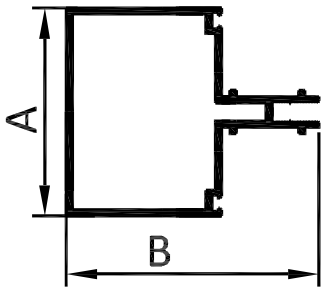

SEC NO	A	B	T	WT/RANGE/12'
7060	67.00	81.40	2.00	5.300-6.500

COMMERCIAL

COMMERCIAL

COMMERCIAL

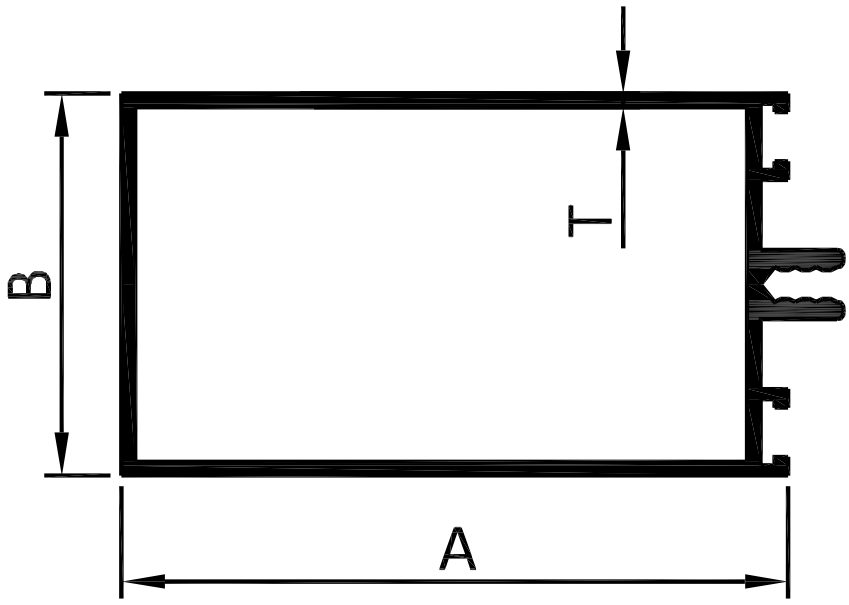

SEC NO	A	B	T	WT/RANGE/12'
7071	96.0	55.0	2.0	6.350-7.000

COMMERCIAL

COMMERCIAL

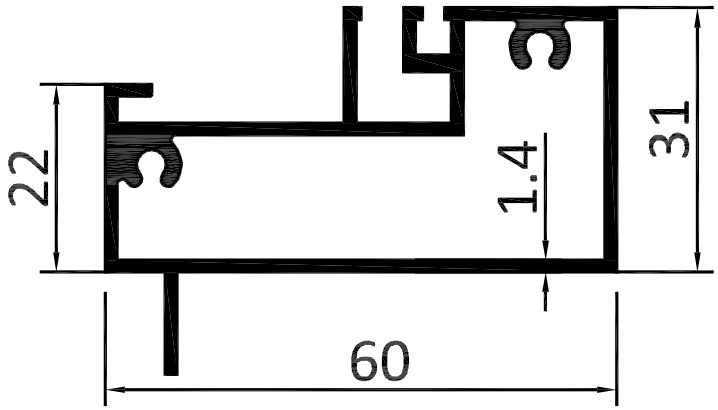

SEC NO	WT/RANGE/12'
8055	3.125-4.150

COMMERCIAL

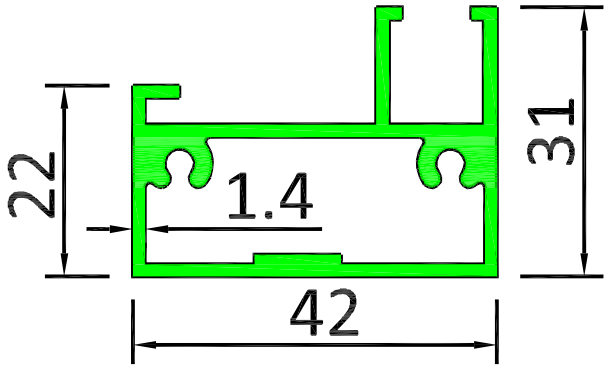

SEC NO	WT/RANGE/12'
8056	2.500-3.200

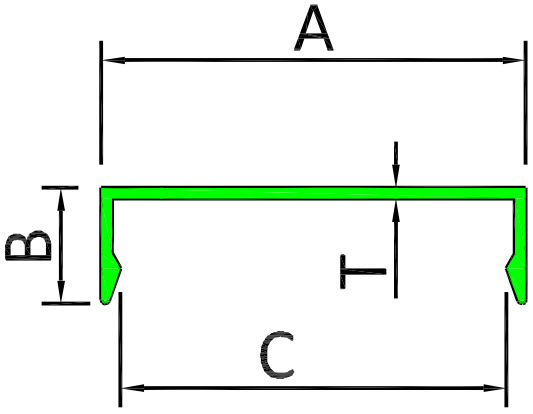

SEC NO	A	B	C	T	WT/RANGE/12'
7073	55.0	15.0	50.0	1.80	1.300-1.600

COMMERCIAL

COMMERCIAL

COMMERCIAL

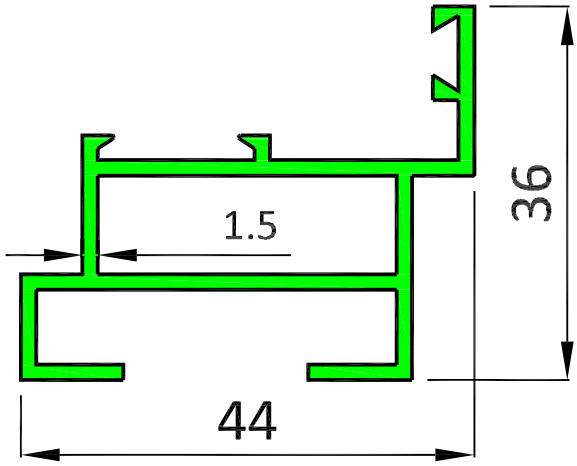

SEC NO	WT/RANGE/12'
5031	2.100-2.400

COMMERCIAL

COMMERCIAL

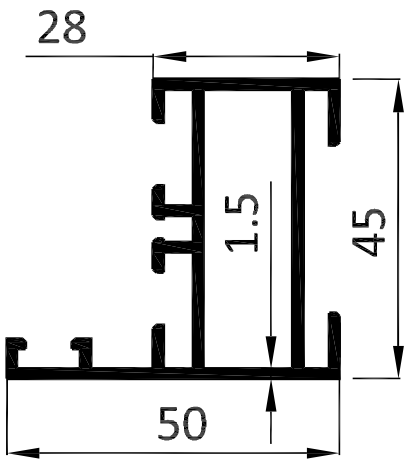

SEC NO	WT/RANGE/12'
5047	3.100-3.400

COMMERCIAL

KMC ALUMINIUM

COMMERCIAL

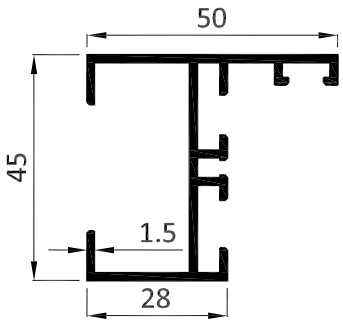

SEC NO	WT/RANGE/12'
5057	2.600-2.800

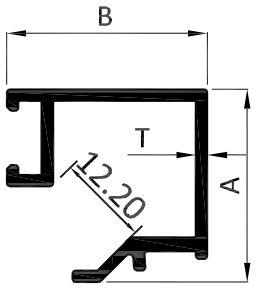

SEC NO	A	B	T	WT/RANGE/12'
3903	25.00	26.0	1.5	1.200 - 1.350

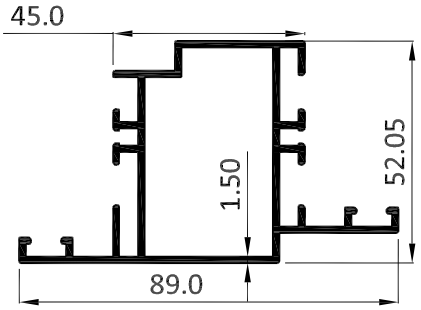

SEC NO	WT/RANGE/12'
3901	4.150 - 5.150

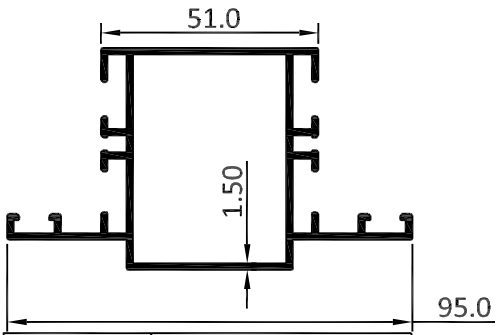

SEC NO	WT/RANGE/12'
3904	4.350 -5.300

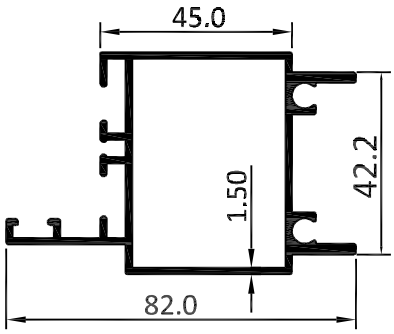

SEC NO	WT/RANGE/12'
3905	4.200 - 5.200

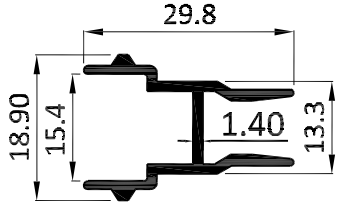

SEC NO	WT/RANGE/12'
3906	1.000 - 1.175

COMMERCIAL

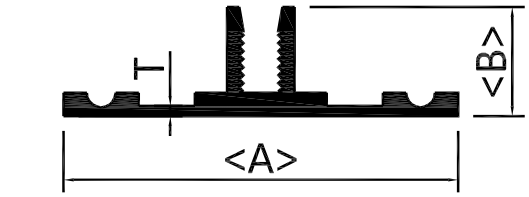

SEC NO	A	B	T	WT/RANGE/12'
1538	49.20	13.60	1.25	1.400-1.600

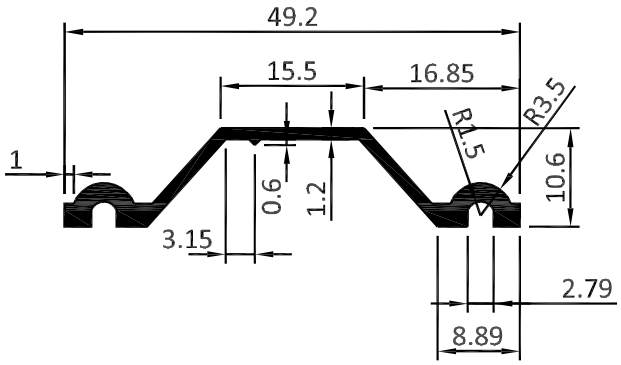

SEC NO	WT/RANGE/12'
1539	0.890-1.060

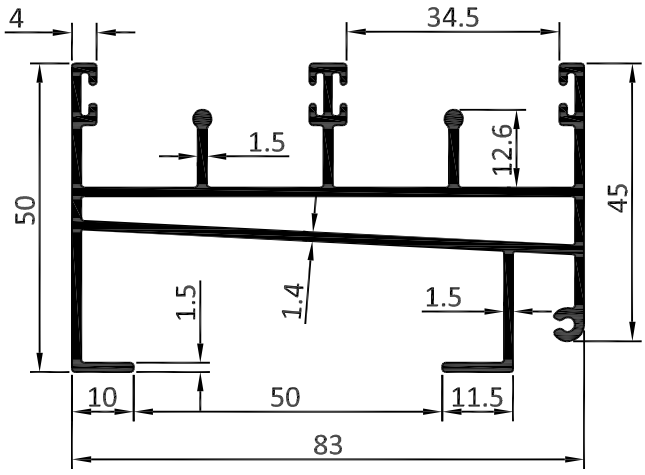

SEC.NO	WEIGHT (kg/m)
3909	1.481

COMMERCIAL

COMMERCIAL

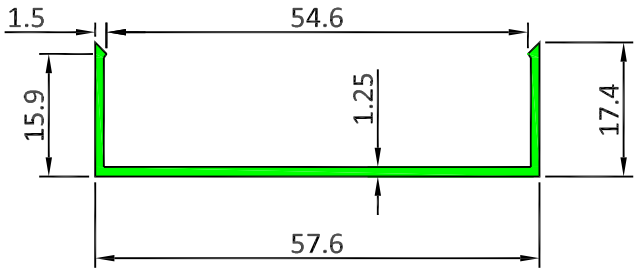

SEC.NO	WEIGHT (kg/m)
4601	0.286

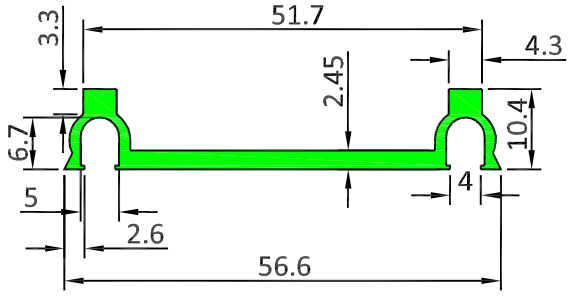

SEC.NO	WEIGHT (kg/m)
4602	0.456

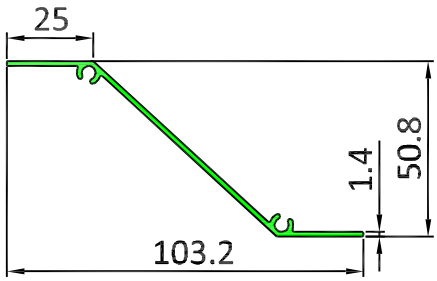

SEC.NO	WEIGHT (kg/m)
4652	0.524

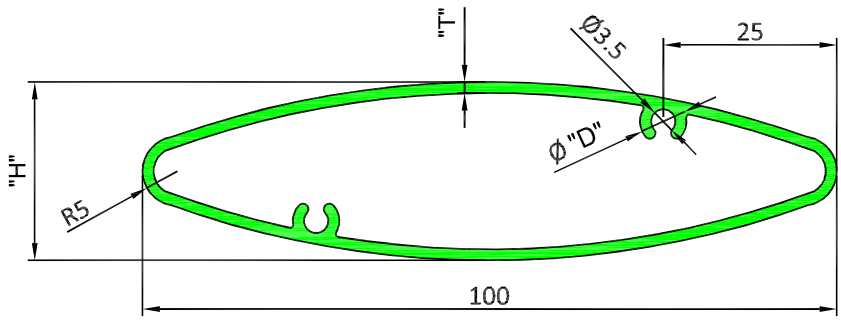

SEC NO	WEIGHT kg/m	"T"	"H"	"D"
7028	0.984	1.60	25.7	6.7
K7027	0.914	1.45	25.8	6.5

COMMERCIAL

COMMERCIAL

ALL DIMENSIONS ARE IN MM

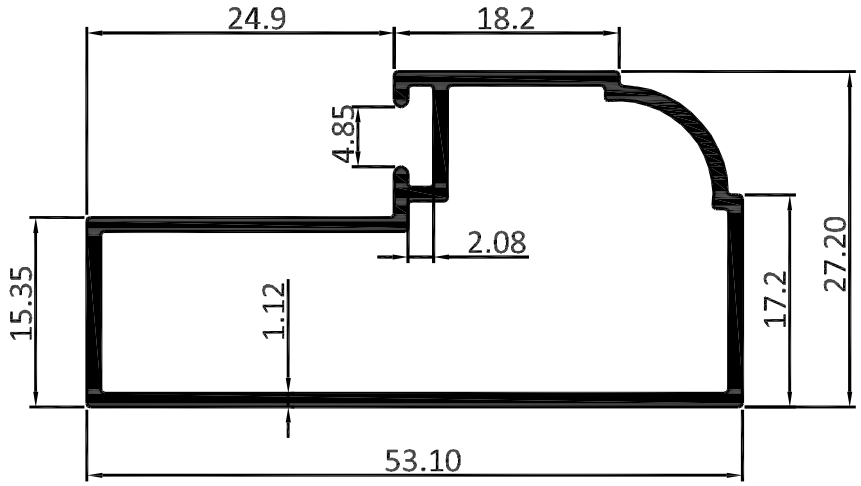

SEC.NO	WEIGHT (kg/m)
8217	0.481

COMMERCIAL

COMMERCIAL

COMMERCIAL

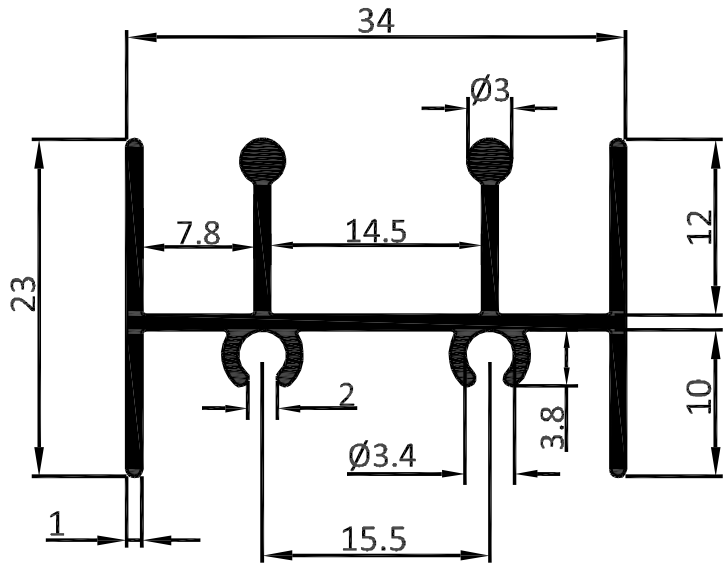

SEC.NO	WEIGHT (kg/m)
8632	0.342

COMMERCIAL

COMMERCIAL

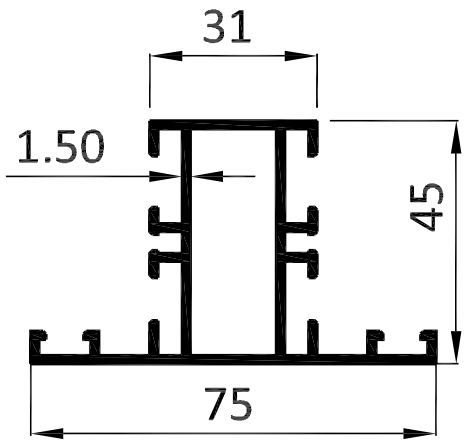

SEC NO	WT/RANGE/12'
5048	3.850-4.150

COMMERCIAL

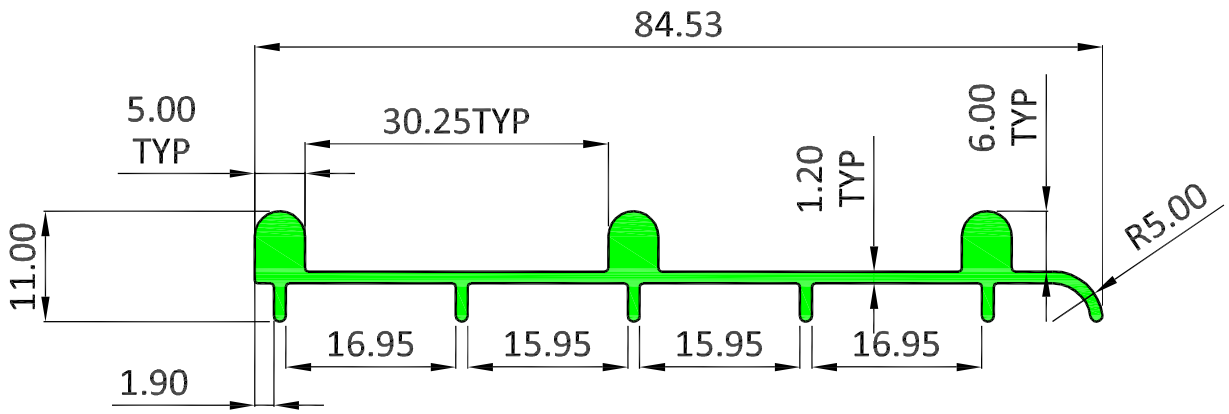

SEC.NO	WEIGHT (kg/m)
K6965	0.563

COMMERCIAL

COMMERCIAL

COMMERCIAL

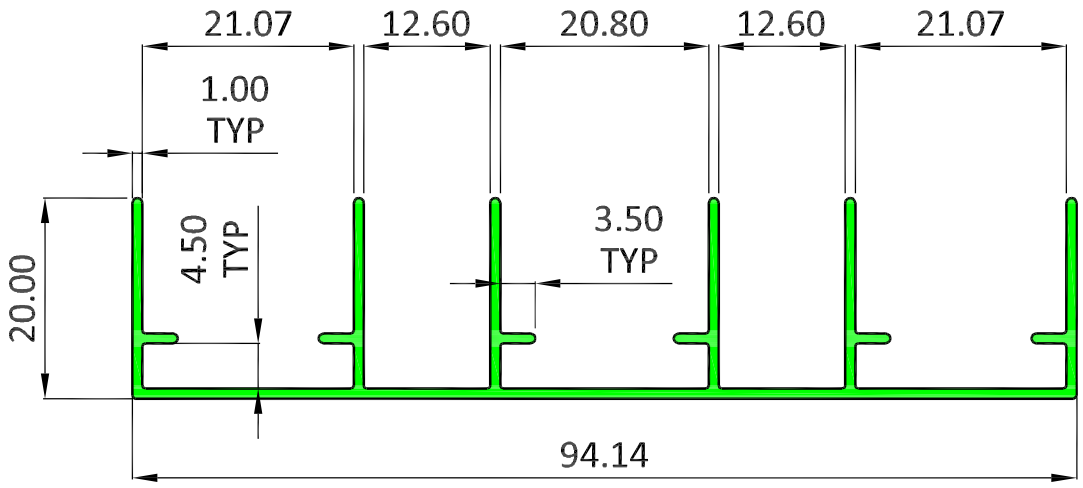

SEC.NO	WEIGHT (kg/m)
K6966	0.619

COMMERCIAL

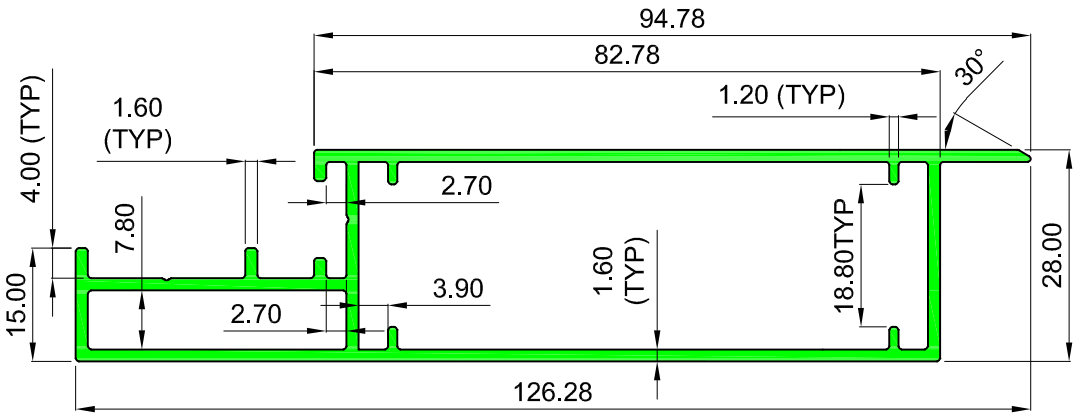

SEC NO	WEIGHT kg/m
K7183	1.428

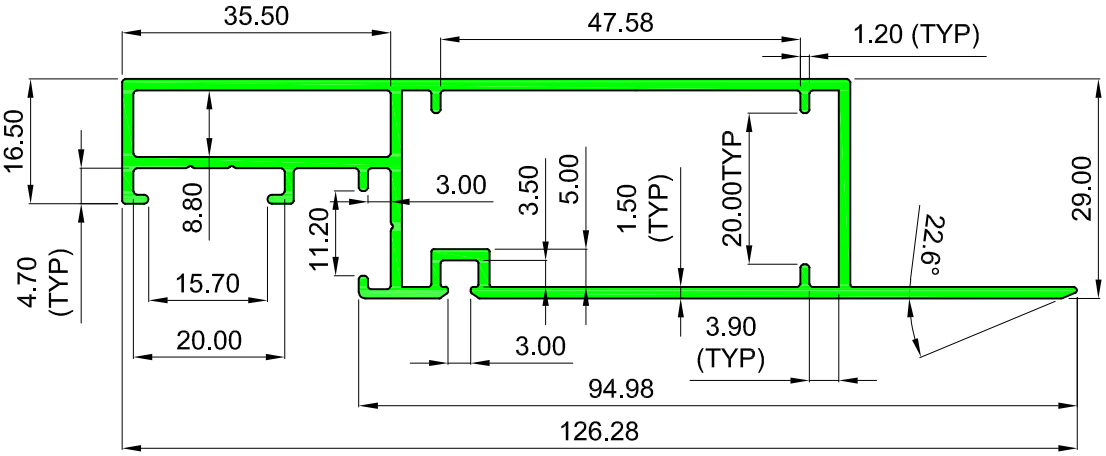

SEC NO	WEIGHT kg/m
K7222	1.311

COMMERCIAL

COMMERCIAL

KMC ALUMINIUM PVT. LTD.

COMMERCIAL

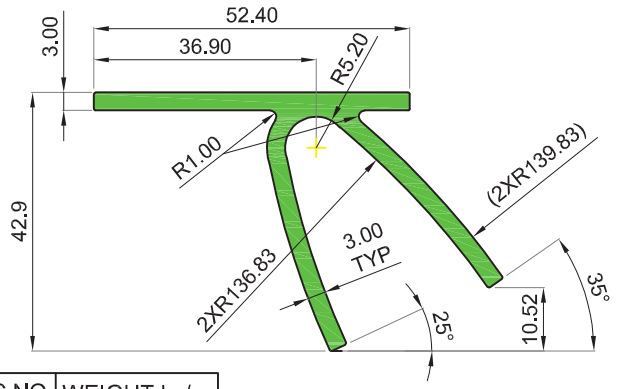

SEC NO	WEIGHT kg/m
K7026	1.105

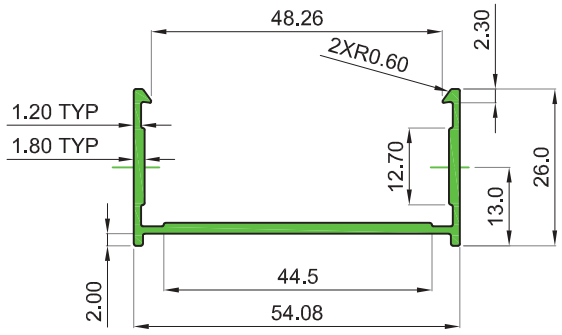

SEC NO	WEIGHT kg/m
K7022	0.467

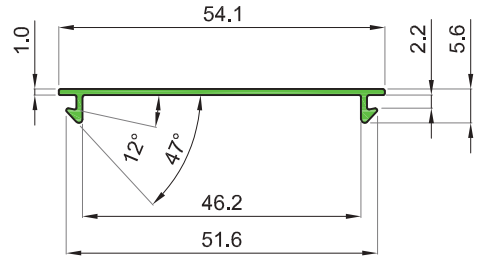

SEC NO	WEIGHT kg/m
K7023	0.183

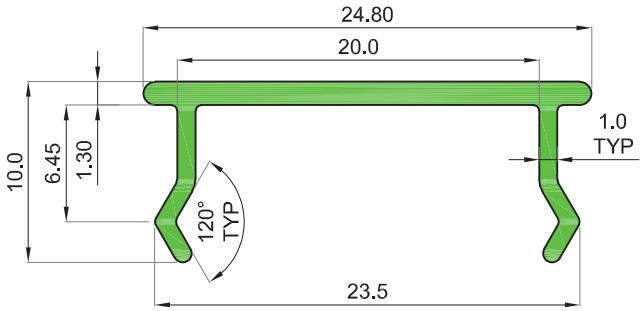

SEC NO	WEIGHT kg/m
K7025	0.136

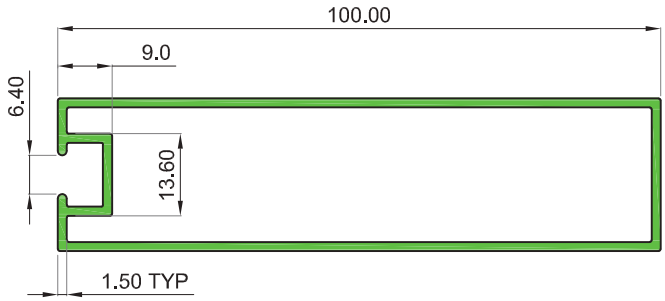

SEC NO	WEIGHT kg/m
K7024	1.070

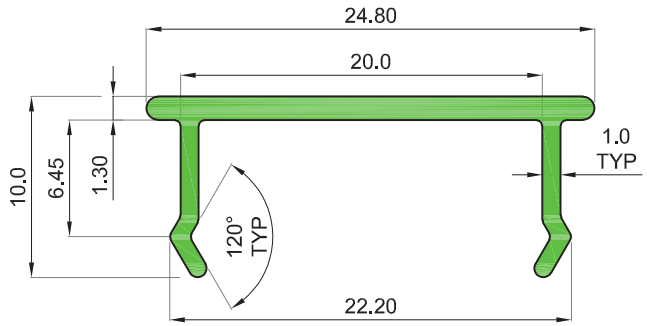

SEC NO	WEIGHT kg/m
K7025	0.136

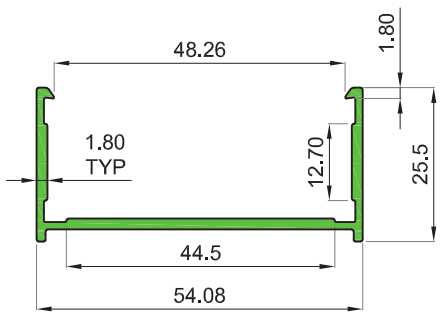

SEC NO	WEIGHT kg/m
K7022	0.467

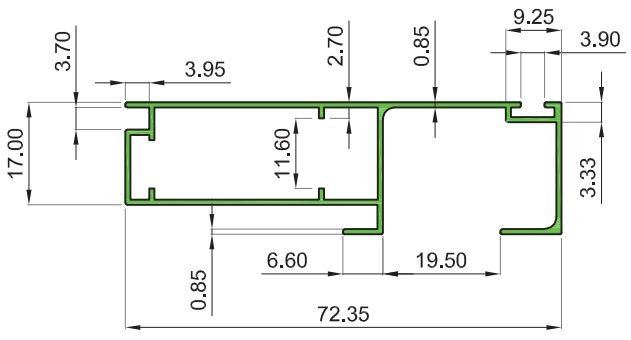

SEC NO	WEIGHT kg/m
K7449	0.472

COMMERCIAL

KMC ALUMINIUM PVT. LTD.

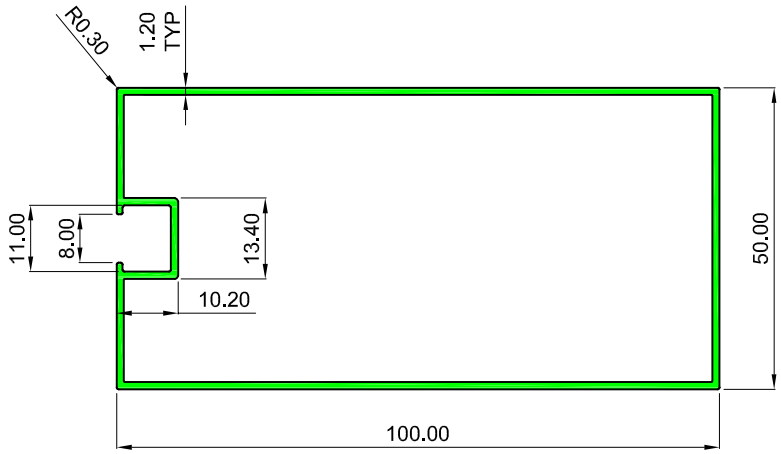

SEC NO	WEIGHT kg/m
K7275	1.02

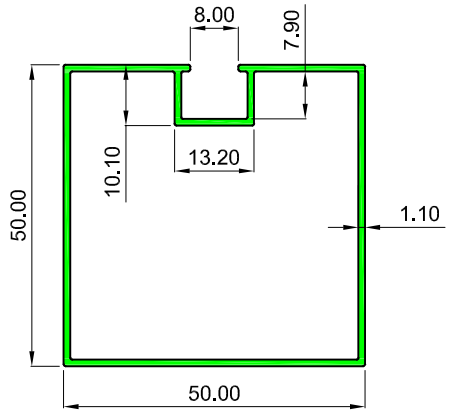

SEC NO	WEIGHT kg/m
K7279	0.643

COMMERCIAL

COMMERCIAL

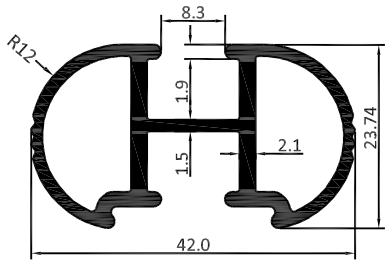

SEC NO	WEIGHT kg /mtr.
8380	0.645

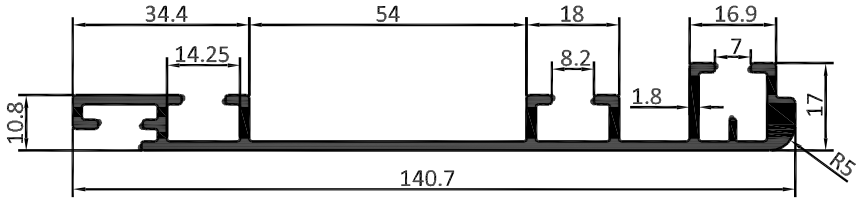

SEC NO	WEIGHT kg /mtr.
8605	1.248

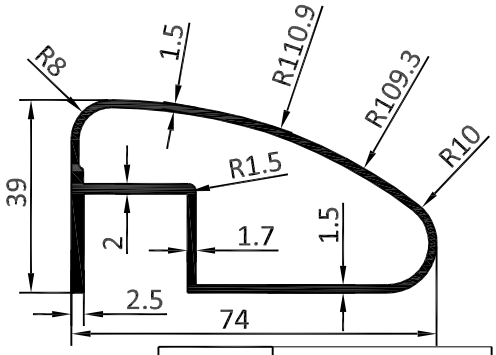

SEC NO	WEIGHT kg /mtr.
8855	0.971

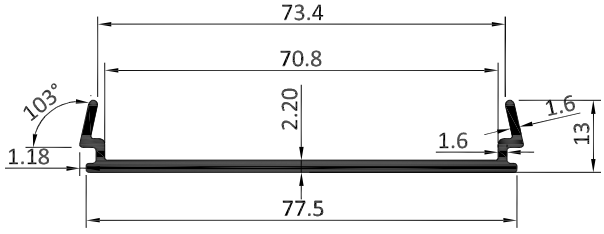

SEC NO	WEIGHT kg /mtr.
8932	0.572

COMMERCIAL

COMMERCIAL

KMC ALUMINIUM

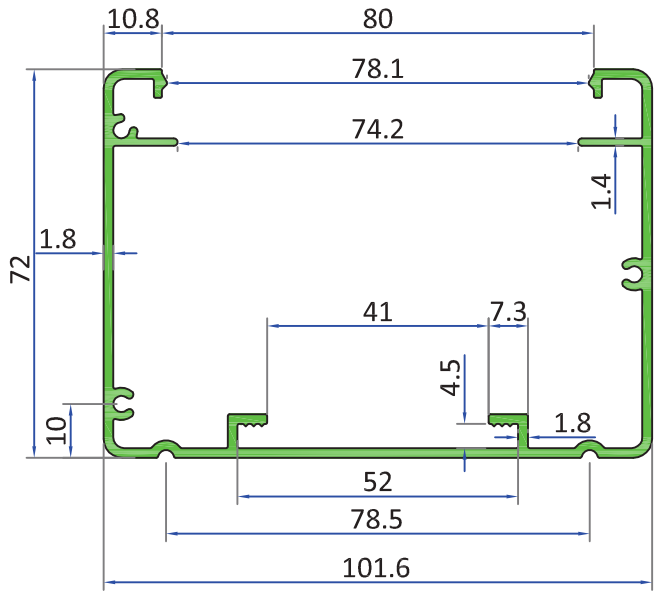

SEC NO	WEIGHT kg /mtr.
8933	1.582

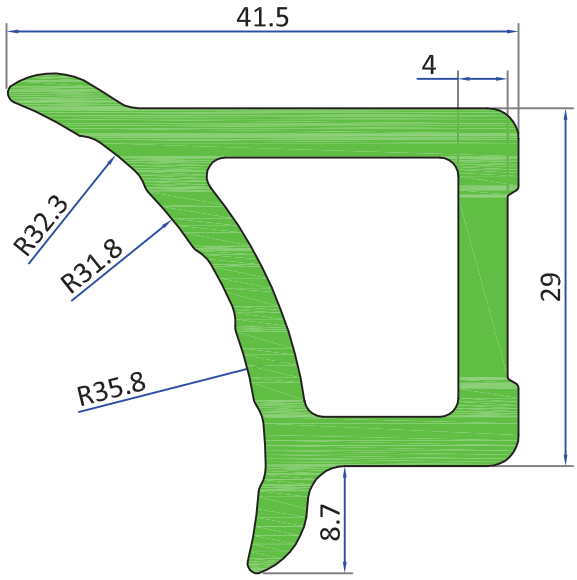

SEC NO	WEIGHT kg /mtr.
9088	1.240

COMMERCIAL

COMMERCIAL

KMC ALUMINIUM

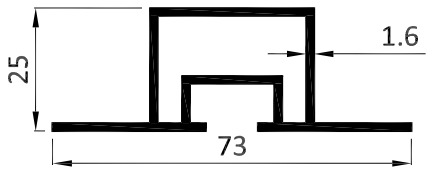

SEC NO	WT/RANGE/12'
5070	2.700-3.100

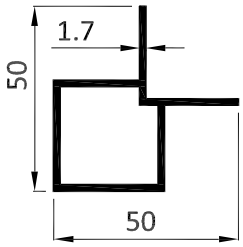

SEC NO	WT/RANGE/12'
5071	2.450-2.850

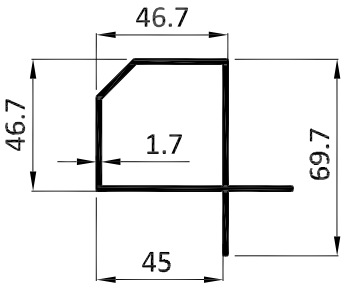

SEC NO	WT/RANGE/12'
6109	3.600-3.900

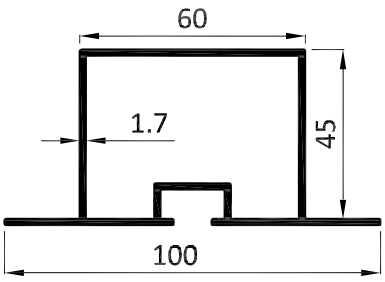

SEC NO	WT/RANGE/12'
6159	4.500-5.000

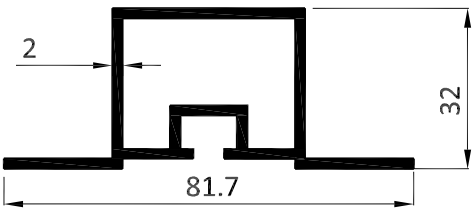

SEC NO	WT/RANGE/12'
7093	3.550-4.330

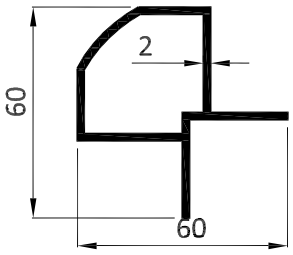

SEC NO	WT/RANGE/12'
7095	3.250-3.750

COMMERCIAL

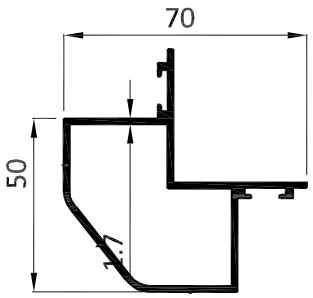

SEC NO	WT/RANGE/12'
7094	3.840-4.200

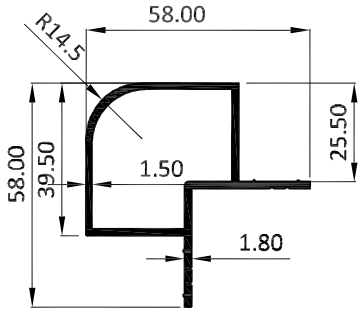

SEC NO	WT/RANGE/12'
8775	2.753-3.304

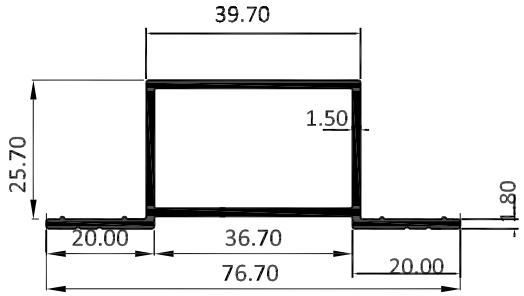

SEC NO	WT/RANGE/12'
8776	2.305-2.766

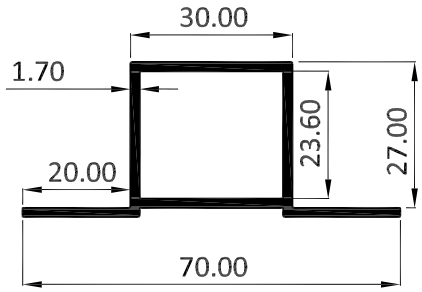

SEC NO	WT/RANGE/12'
8793	2.276-2.731

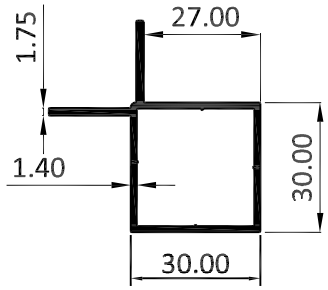

SEC NO	WT/RANGE/12'
8794	2.015-2.419

COMMERCIAL

COMMERCIAL

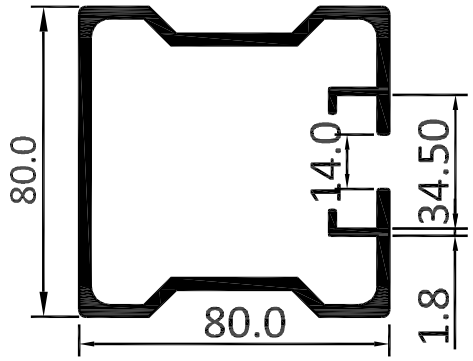

SEC NO	WT/RANGE/12'
6553	9.200 - 10.500

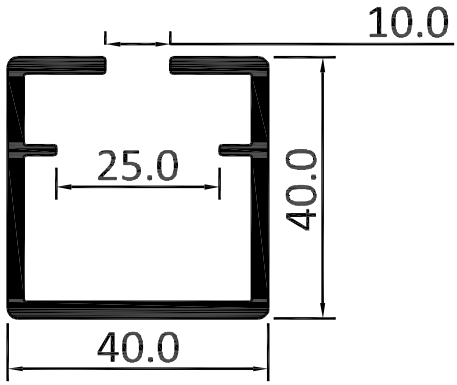

SEC NO	WT/RANGE/12'
6554	3.300 - 3.800

COMMERCIAL

COMMERCIAL

KMC ALUMINIUM

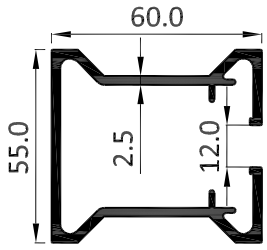

SEC NO	WT/RANGE/12'
6555	5.450 - 6.300

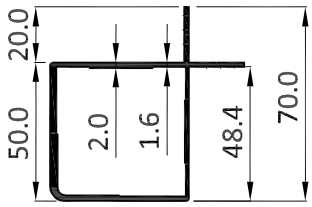

SEC NO	WT/RANGE/12'
6558	3.850 - 4.200

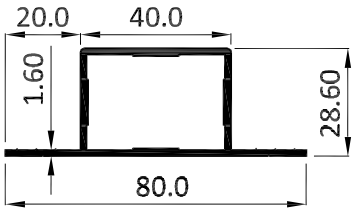

SEC NO	WT/RANGE/12'
6556	2.600 - 3.180

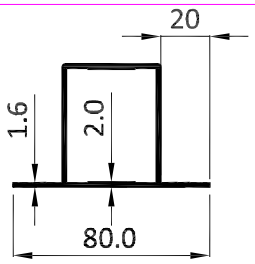

SEC NO	WT/RANGE/12'
6559	3.350 - 3.700

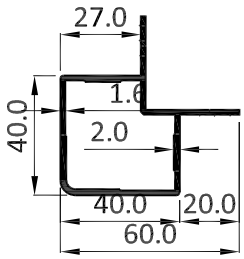

SEC NO	WT/RANGE/12'
6557	3.100 - 3.450

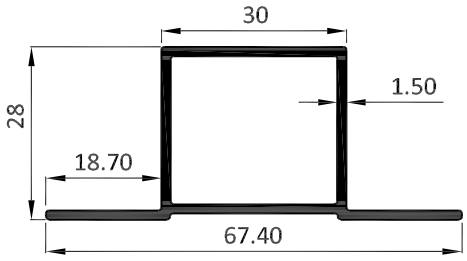

SEC NO	WT/RANGE/12'
8151	1.950 - 2.410

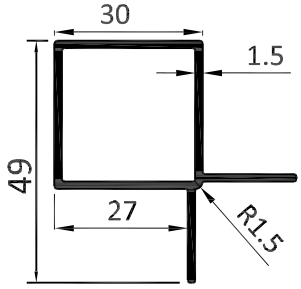

SEC NO	WT/RANGE/12'
8152	2.010 - 2.490

COMMERCIAL

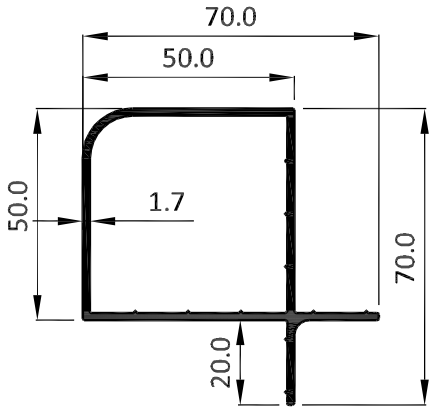

SEC NO	WT/RANGE/12'
8612	3.501 - 4.201

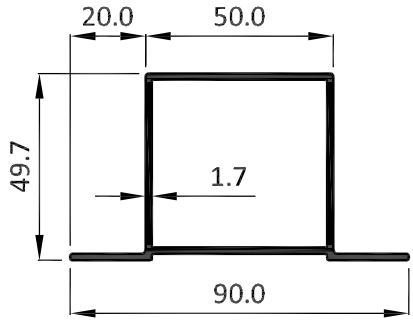

SEC NO	WT/RANGE/12'
8613	0.960 - 1.152

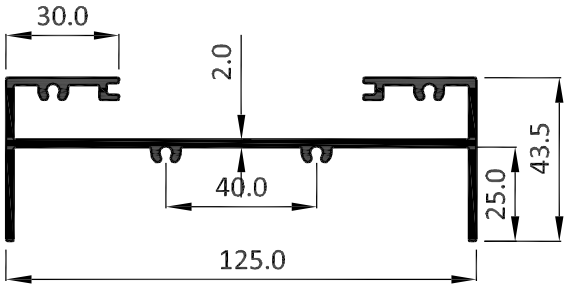

SEC NO	WT/RANGE/12'
8614	5.504 - 6.605

COMMERCIAL

COMMERCIAL

KMC ALUMINIUM

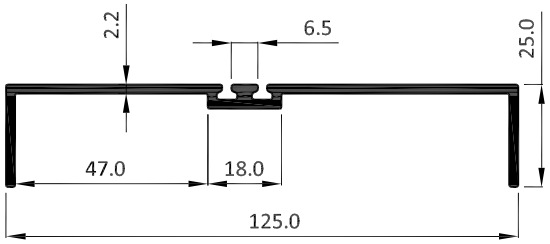

SEC NO	WT/RANGE/12'
8615	3.332 - 3.984

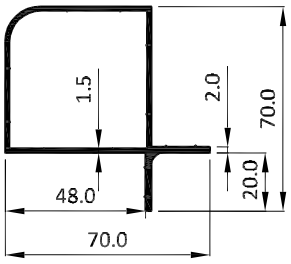

SEC NO	WT/RANGE/12'
9103	3.281 - 3.935

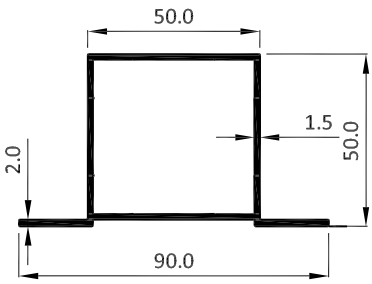

SEC NO	WT/RANGE/12'
9104	3.304 - 3.965

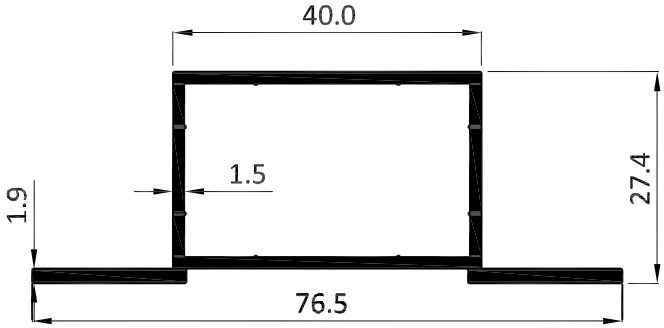

SEC NO	WT/RANGE/12'
9105	2.346 - 2.815

COMMERCIAL

COMMERCIAL

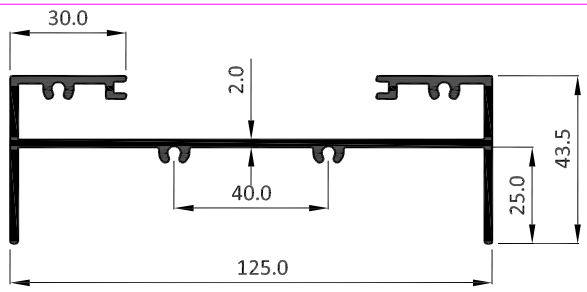

SEC NO	WT/RANGE/12'
8614	5.504 - 6.605

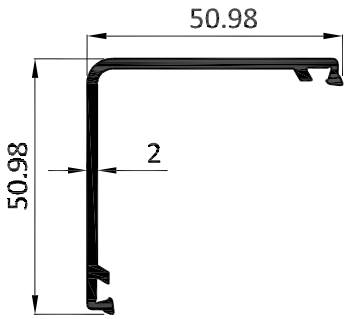

SEC NO	WEIGHT kg /mtr.
6536	0.579

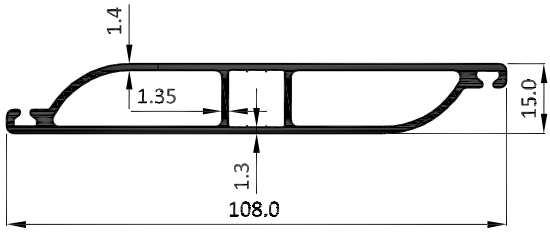

SEC NO	WT/RANGE/12'
8616	3.228 - 3.873

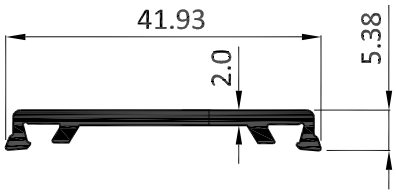

SEC NO	WEIGHT kg /mtr.
6539	0.278

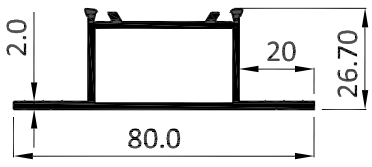

SEC NO	WEIGHT kg /mtr.
6540	0.805

COMMERCIAL

COMMERCIAL

COMMERCIAL

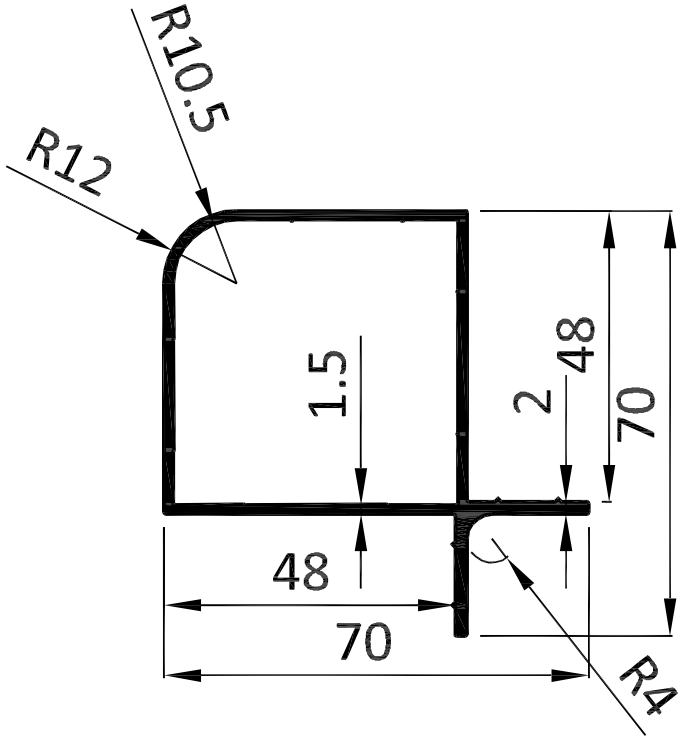

SEC NO	WEIGHT kg /mtr.
9103	0.995

COMMERCIAL

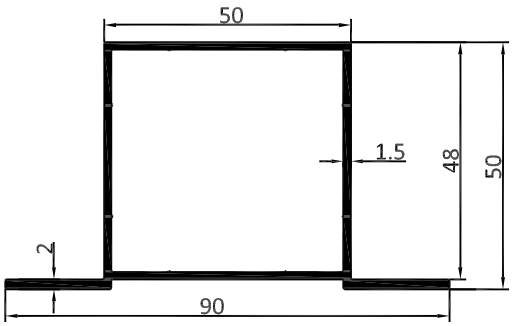

SEC NO	WEIGHT kg /mtr.
9104	1.003

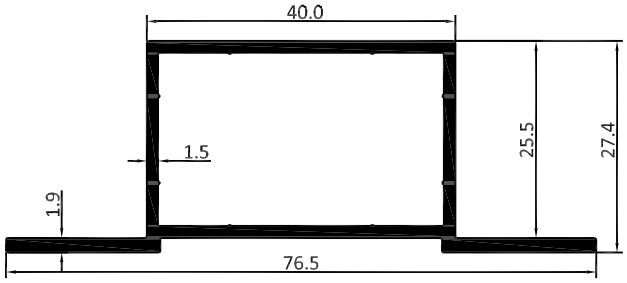

SEC NO	WEIGHT kg /mtr.
9105	0.712

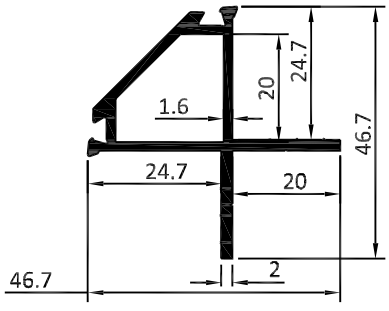

SEC NO	WEIGHT kg /mtr.
6538	0.640

COMMERCIAL

COMMERCIAL

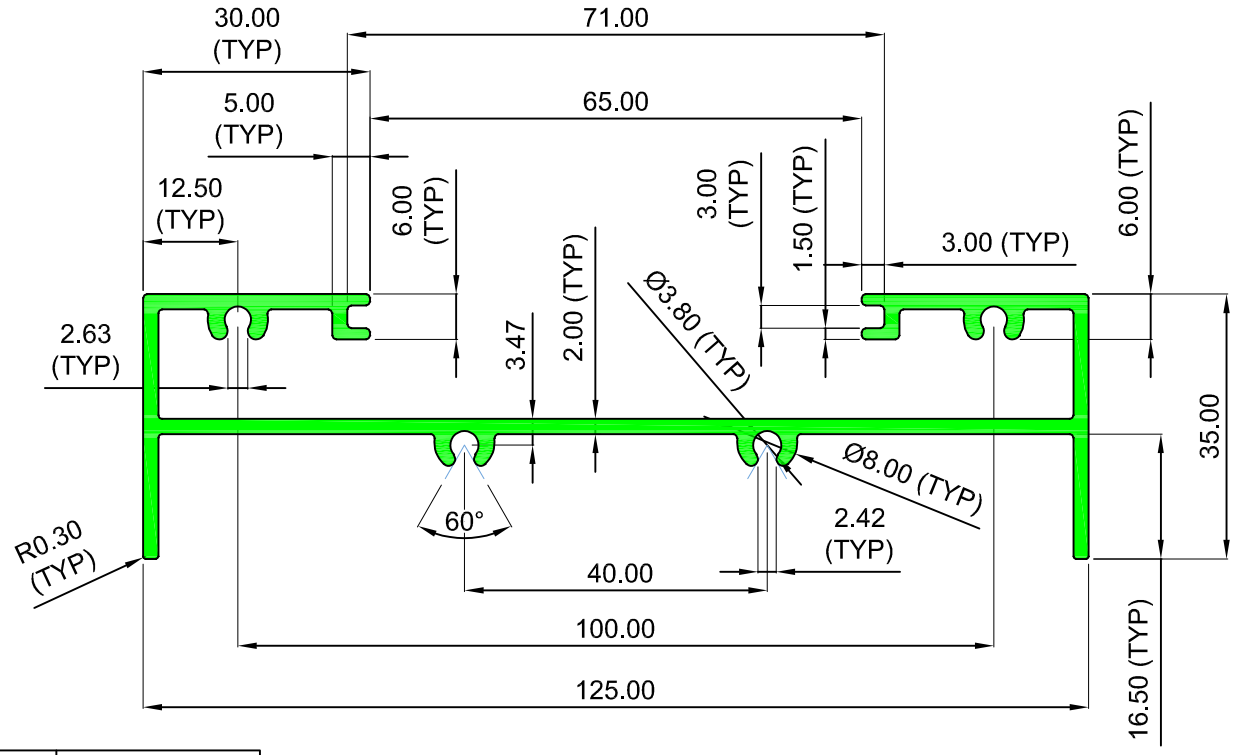

SEC NO	WEIGHT kg/m
K7568	1.576

COMMERCIAL

COMMERCIAL

KMC ALUMINIUM

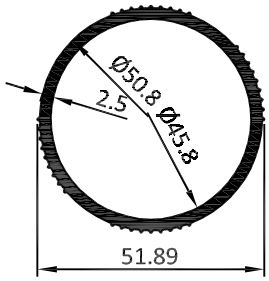

SEC NO	WT/RANGE/12'
8156	3.485 - 4.180

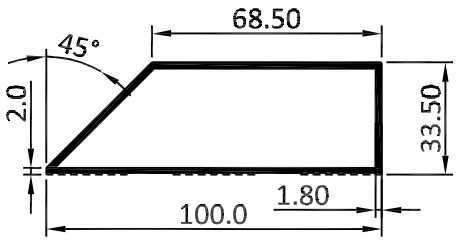

SEC NO	WT/RANGE/12'
5065	3.710-4.640

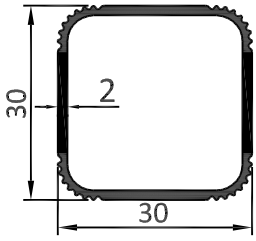

SEC NO	WT/RANGE/12'
9022	1.770 - 2.165

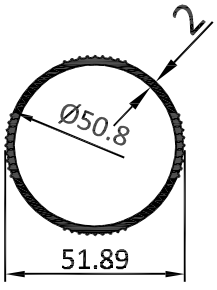

SEC NO	WT/RANGE/12'
3079	2.990-3.310

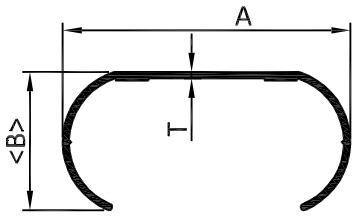

SEC NO	A	B	T	WT/RANGE/12'
2410	66.60	32.00	1.50	1.800 - 2.000

COMMERCIAL

COMMERCIAL

KMC ALUMINIUM

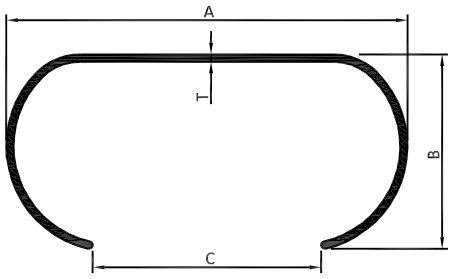

SEC NO	A	B	C	T	WT/RANGE/12'
2413	65.00	31.50	37.00	1.20	1.400 - 1.600

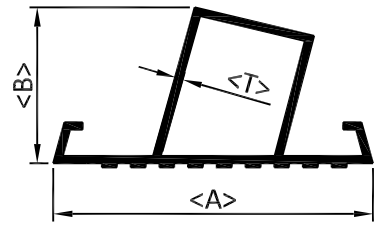

SEC NO	A	B	T	WT/RANGE/12'
2406	64.80	31.60	1.40	1.800 - 2.100
2407	64.80	31.60	1.60	2.350 - 2.600
2408	64.40	31.90	1.07	1.750 - 1.930

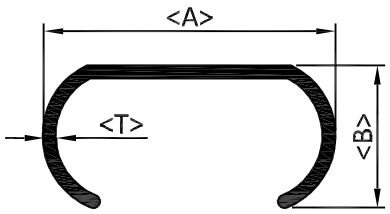

SEC NO	A	B	T	WT/RANGE/12'
2403	66.00	31.60	2.00	2.280 - 2.520
2404	66.00	31.60	2.40	2.820 - 3.060
2405	66.00	31.60	3.00	3.420 - 3.660

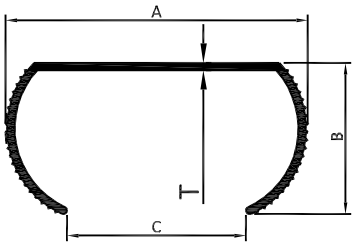

SEC NO	A	B	C	T	WT/RANGE/12'
2412	49.00	24.50	29.00	1.20	1.050 - 1.300

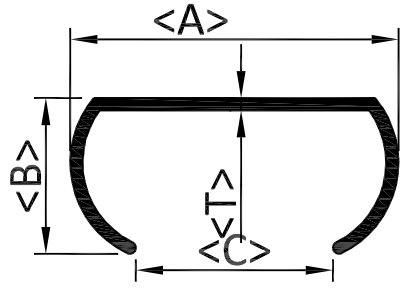

SEC NO	A	B	C	T	WT/RANGE/12'
2421	65.00	32.00	36.00	1.20	1.590 - 1.740
2422	66.50	31.60	40.50	2.00	2.490 - 2.670
2423	66.50	31.60	40.10	2.50	3.090 - 3.330
2424	66.50	31.60	39.27	3.00	3.690 - 3.930
2425	66.50	31.60	39.60	3.50	4.740 - 5.100
2426	100.00	31.60	73.10	3.50	4.865-5.835
2432	79.00	35.95	45.00	4.00	5.400-5.960

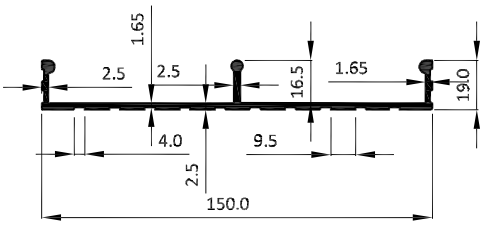

SEC NO	WT/RANGE/12'
8205	4.247 - 5.096

COMMERCIAL

COMMERCIAL

ALL DIMENSIONS ARE IN MM

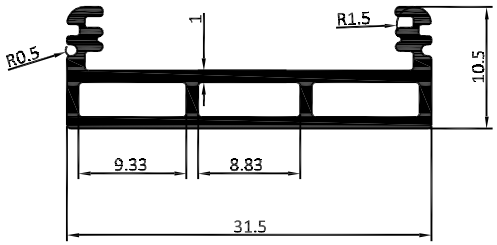

SEC NO	WEIGHT kg /mtr.
8368	0.257

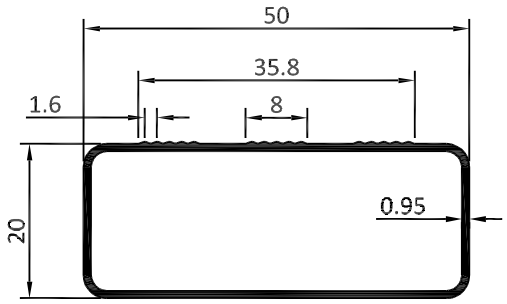

SEC NO	WEIGHT kg /mtr.
8159	0.349

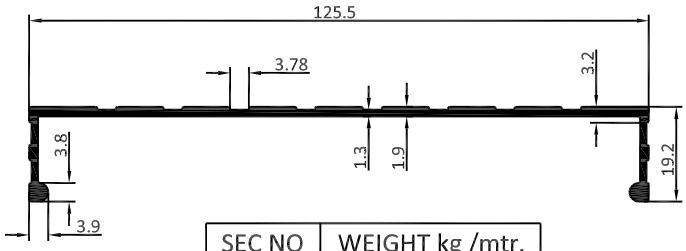

SEC NO	WEIGHT kg /mtr.
16011	0.772

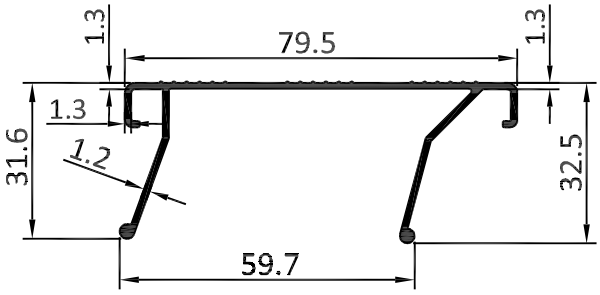

SEC NO	WEIGHT kg /mtr.
8160	0.570

COMMERCIAL

COMMERCIAL

COMMERCIAL

COMMERCIAL

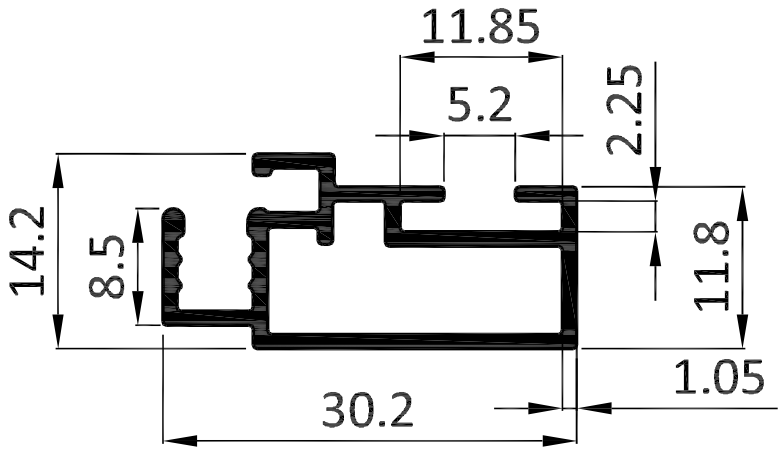

SEC NO	WT/RANGE/12'
7441	0.950 - 1.140

KMC ALUMINIUM

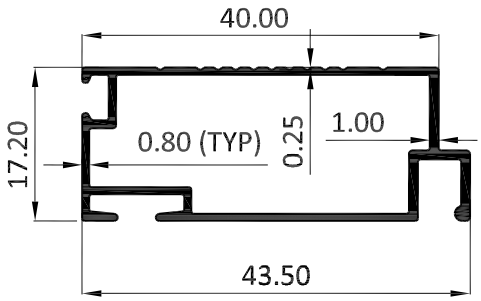

SEC NO	WT/RANGE/12'
8183	1.017 - 1.221

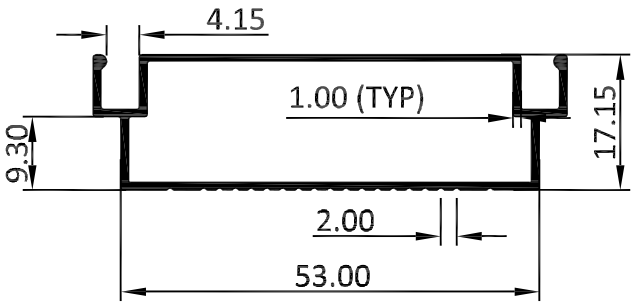

SEC NO	WT/RANGE/12'
8185	**1.30 - 1.56**

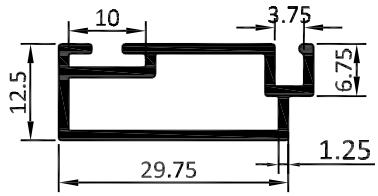

SEC NO	WT/RANGE/12'
8120	1.160 - 1.360

COMMERCIAL

COMMERCIAL

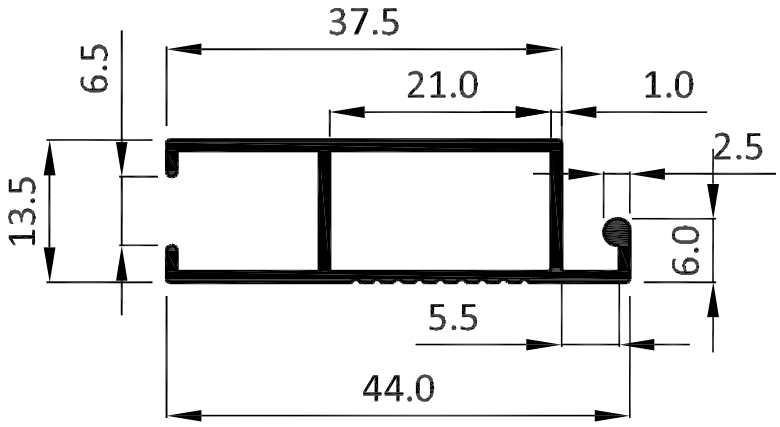

SEC NO	WT/RANGE/12'
8633	1.027 - 1.233

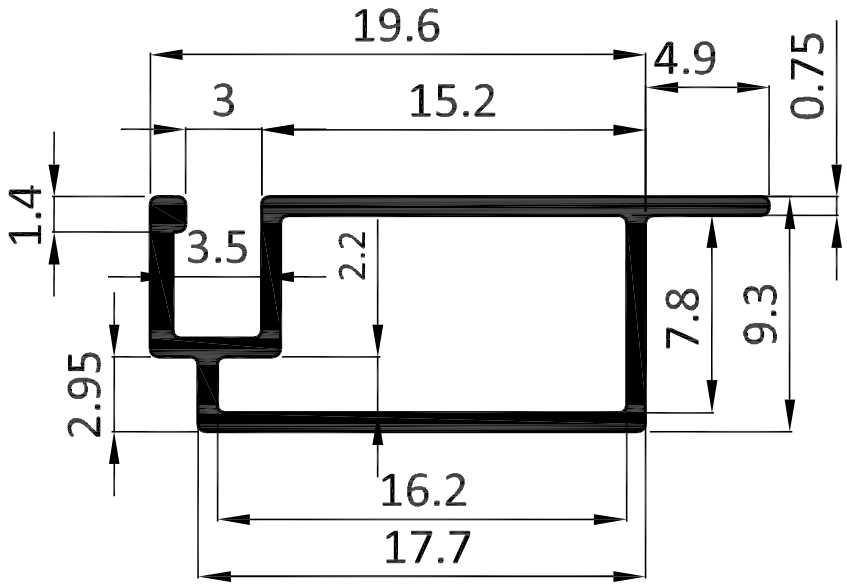

SEC NO	WEIGHT (kg/m)
6574	0.132

COMMERCIAL

COMMERCIAL

KMC ALUMINIUM

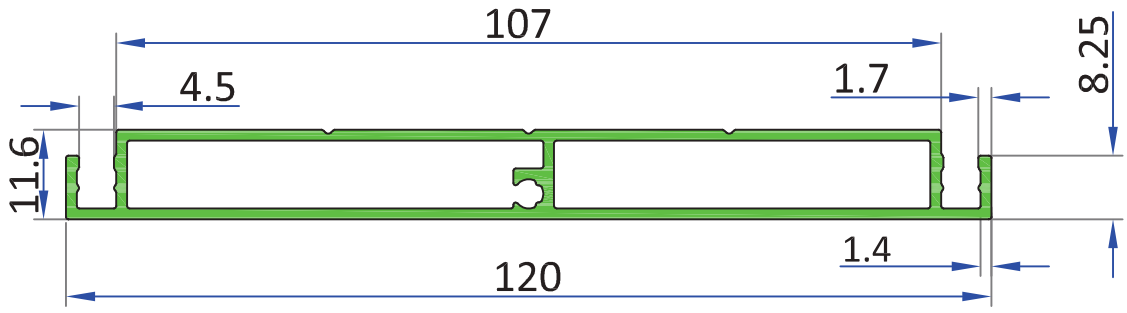

SEC NO	WEIGHT (kg/m)
7438	1.037

COMMERCIAL

COMMERCIAL

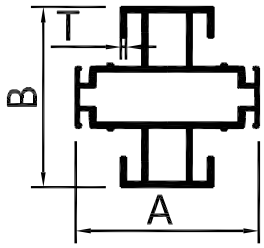

SEC NO	A	B	T	WT/RANGE/12'
7051	76.00	74.80	2.00	8.200-9.000

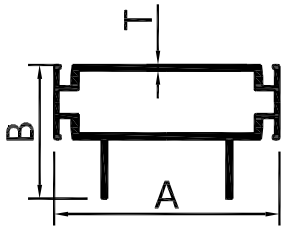

SEC NO	A	B	T	WT/RANGE/12'
7053	76.00	45.20	2.00	4.500-5.400

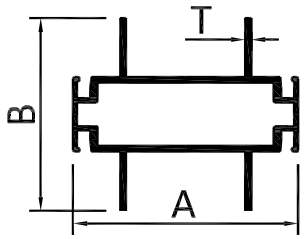

SEC NO	A	B	T	WT/RANGE/12'
7052	76.00	65.20	2.20	5.500-5.800

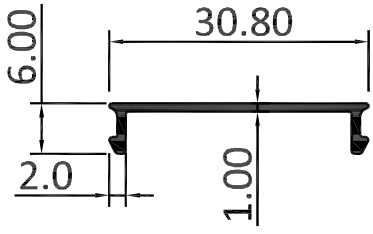

SEC NO	WT/RANGE/12'
8778	0.378-0.454

COMMERCIAL

COMMERCIAL

MOTOR BODY

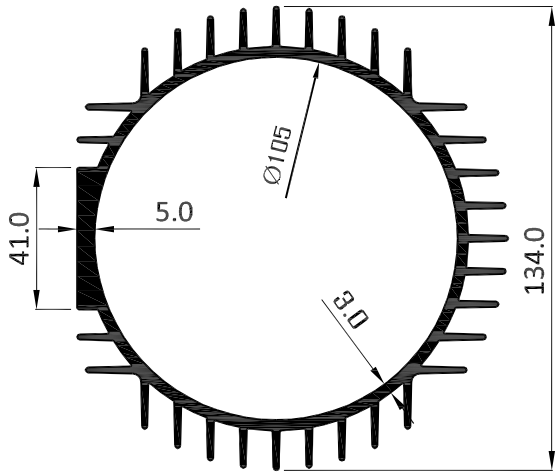

SEC NO	WT/RANGE/12'
A 3750	18.000-19.000

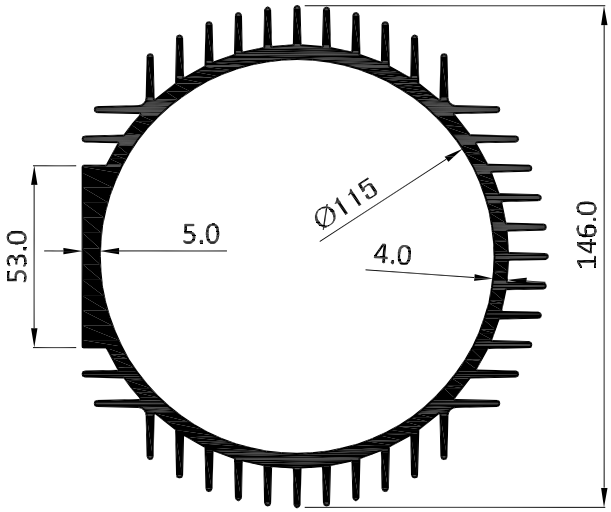

SEC NO	WT/RANGE/12'
A 3751	24.300-25.500

COMMERCIAL

COMMERCIAL

ALL DIMENSIONS ARE IN MM

MOTOR BODY

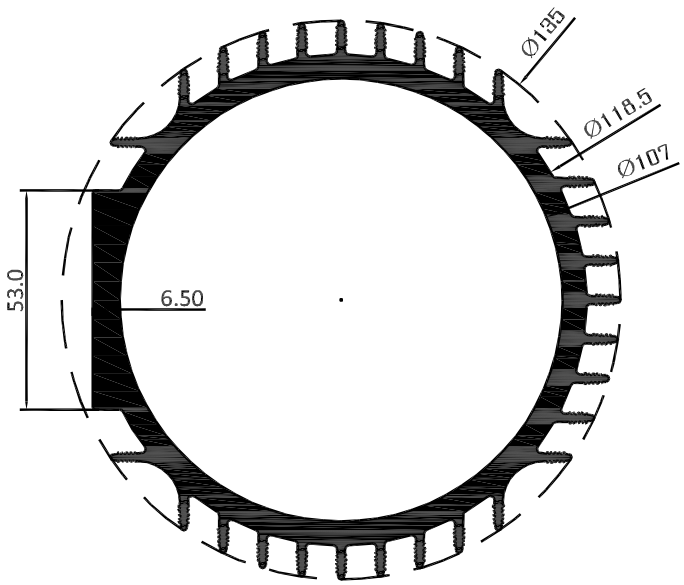

SEC NO	WT/RANGE/12'
3754	24.300-29.150

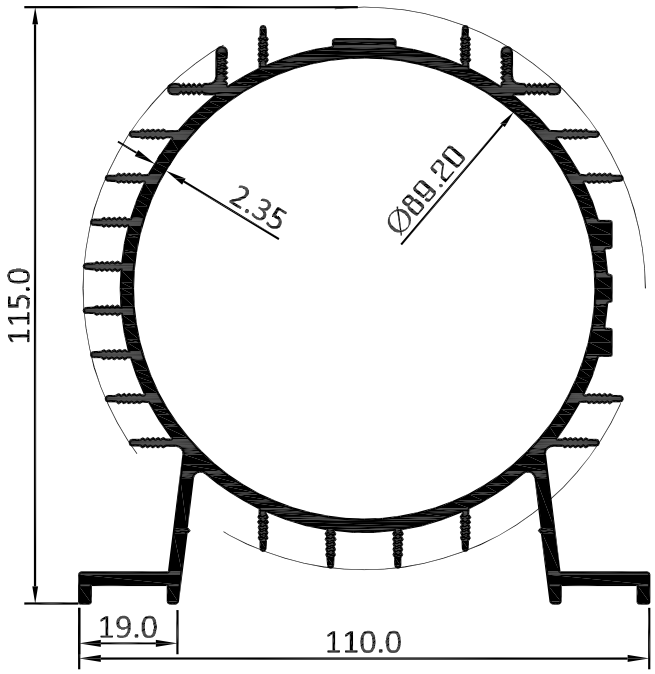

SEC NO	WT/RANGE/12'
3765	10.673 - 13.043

COMMERCIAL

COMMERCIAL

ALL DIMENSIONS ARE IN MM

KMC ALUMINIUM

MOTOR BODY

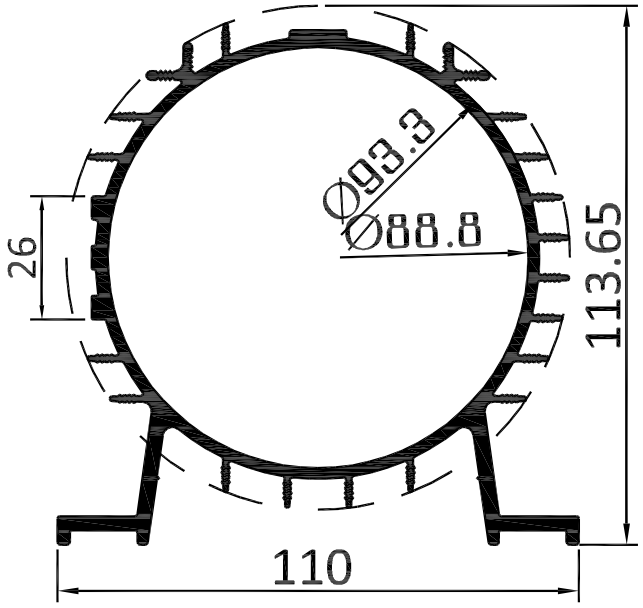

SEC NO	WT/RANGE/12'
3772	11.840 - 12.560

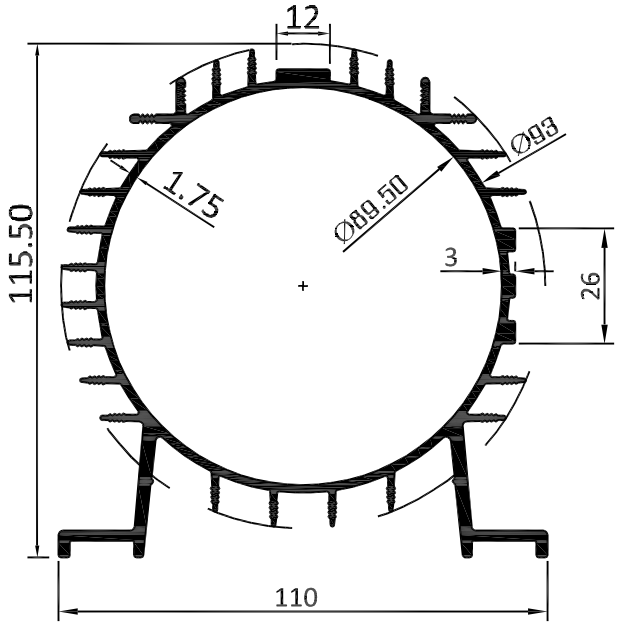

SEC NO	WT/RANGE/12'
3776	10.060 - 12.070

COMMERCIAL

COMMERCIAL

ALL DIMENSIONS ARE IN MM

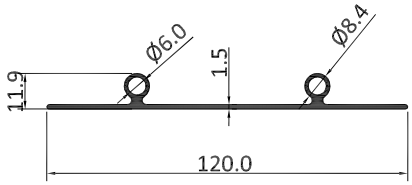

SEC NO	WT/RANGE/12'
8941	2.233 - 2.680

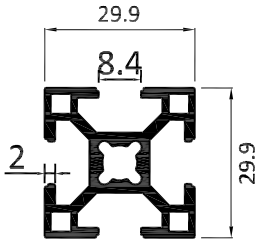

SEC NO	WT/RANGE/12'
6973	2.500 -3.250

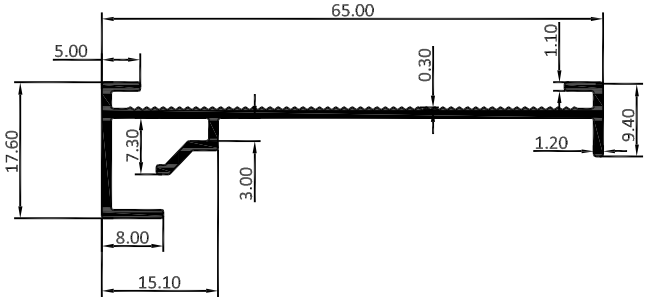

SEC NO	WEIGHT kg /mtr.
4073	0.376

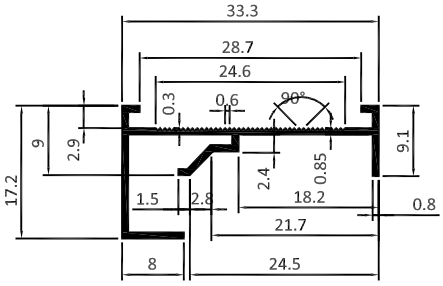

SEC NO	WEIGHT kg /mtr.
4072	0.159

COMMERCIAL

COMMERCIAL

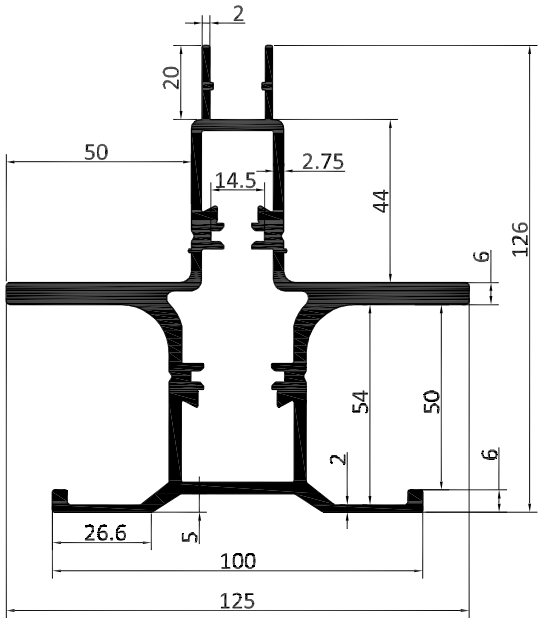

SEC NO	WEIGHT kg /mtr.
8654	4.906

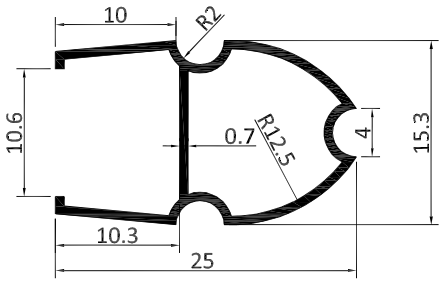

SEC NO	WEIGHT kg /mtr.
8007	0.140

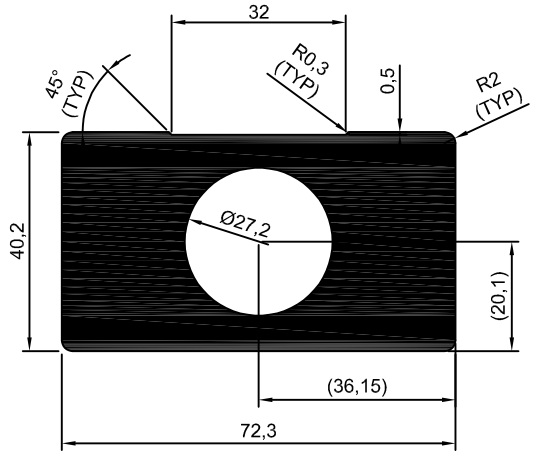

SEC NO	WEIGHT kg/m
K7265	6.317

COMMERCIAL

COMMERCIAL

KMC ALUMINIUM

COMMERCIAL

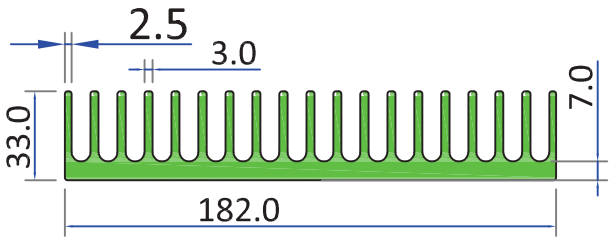

SEC NO	WT/RANGE/12'
6605	27.000-28.600

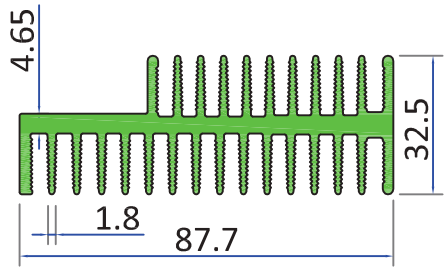

SEC NO	WT/RANGE/12'
6607	10.200 - 10.800

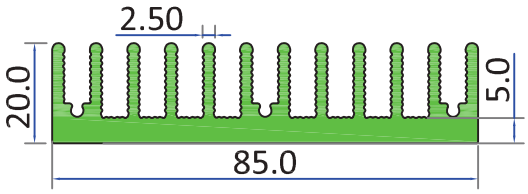

SEC NO	WT/RANGE/12'
6611	8.000 - 9.000

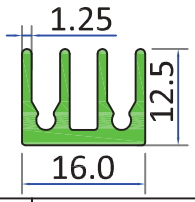

SEC NO	WT/RANGE/12'
6613	0.800 - 1.000

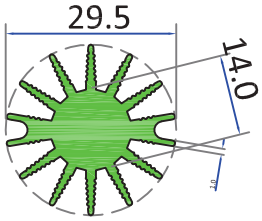

SEC NO	WT/RANGE/12'
6616	2.500 -3.430

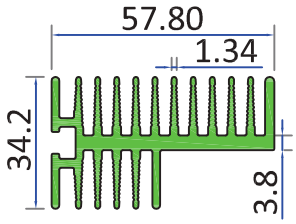

SEC NO	WT/RANGE/12'
6615	5.800 - 7.500

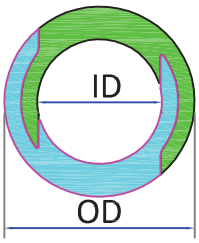

SECNO	OD	ID	WT/RANGE/12'
3064	32	18.0	2.330 - 2.770
3065	33	21.5	2.200 - 2.500
3067	43	25.0	4.228 - 4.900

SECNO	OD	ID	WT/RANGE/12'
3071	58	38	7.200-7.600
3077	48	29	5.030-6.030
3085	64	41	9.200-10.000
3086	48	31	5.100-5.600
3104	38	23	3.450-3.750
3133	54	33	6.230-7.480
6093	54	34	6.700-7.100
9052	32	19	2.300 - 2.800

ALL DIMENSIONS ARE IN MM

KMC ALUMINIUM

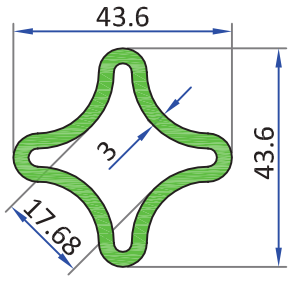

SEC NO	WT/RANGE/12'
9056	3.530-4.030

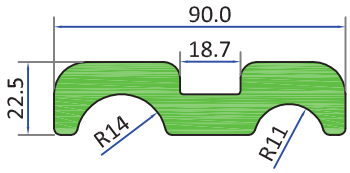

SEC NO	WT/RANGE/12'
8113	12.100 - 14.500

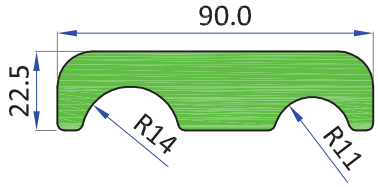

SEC NO	WT/RANGE/12'
8114	13.830 - 16.600

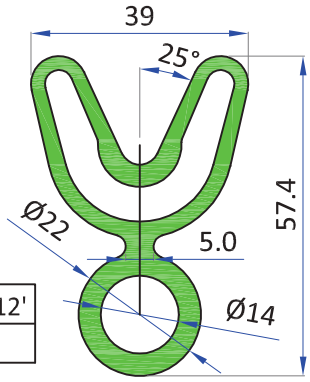

SEC NO	WT/RANGE/12'
8130	5.700 - 6.840

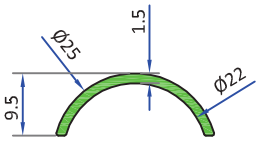

SEC NO	WT/RANGE/12'
8131	0.410 - 0.490

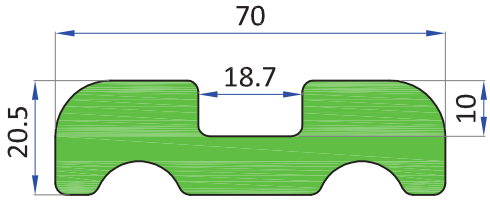

SEC NO	WT/RANGE/12'
8132	10.515 - 12.620

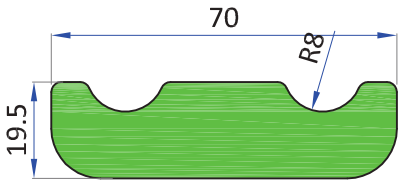

SEC NO	WT/RANGE/12'
8133	10.505 - 12.605

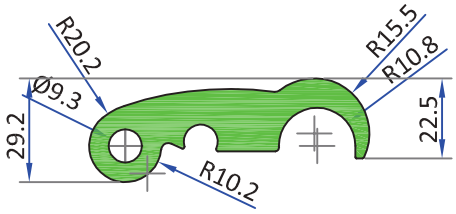

SEC NO	WT/RANGE/12'
8145	9.350 - 11.210

COMMERCIAL

COMMERCIAL

ALL DIMENSIONS ARE IN MM

KMC ALUMINIUM

COMMERCIAL

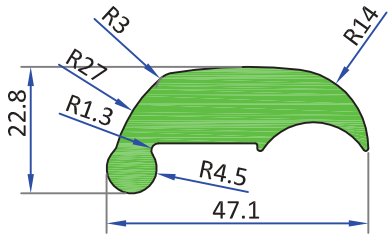

SEC NO	WT/RANGE/12'
8146	4.800 - 5.750

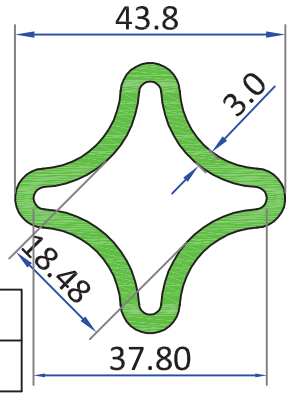

SEC NO	WT/RANGE/12'
8150	3.380 - 4.000

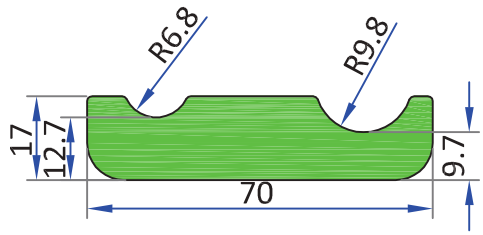

SEC NO	WT/RANGE/12'
8153	9.100 - 10.920

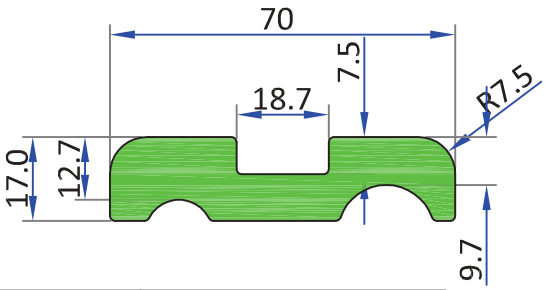

SEC NO	WT/RANGE/12'
8154	7.850 - 9.425

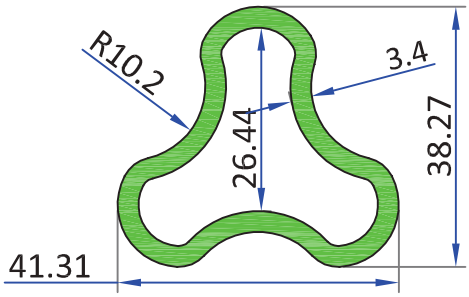

SEC NO	WT/RANGE/12'
8168	3.285 - 3.940

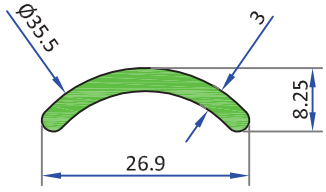

SEC NO	WT/RANGE/12'
8174	0.780 - 0.935

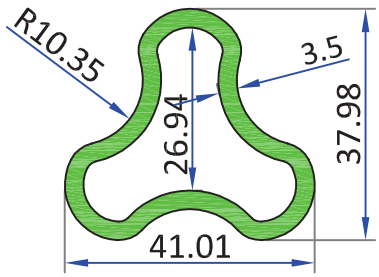

SEC NO	WT/RANGE/12'
8177	3.830 - 4.600

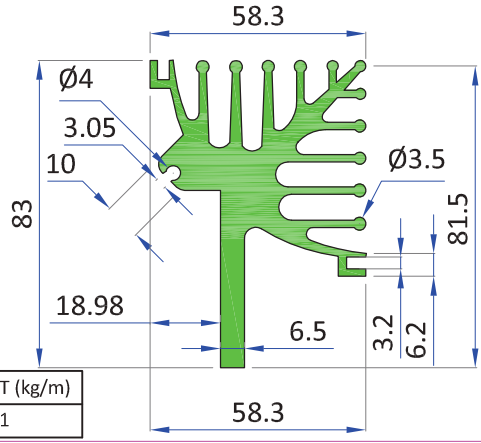

SEC NO	WEIGHT (kg/m)
K6578	4.1

COMMERCIAL

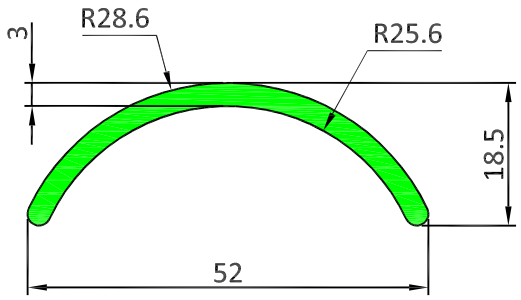

SEC NO	WEIGHT (kg/m)
5044	0.513

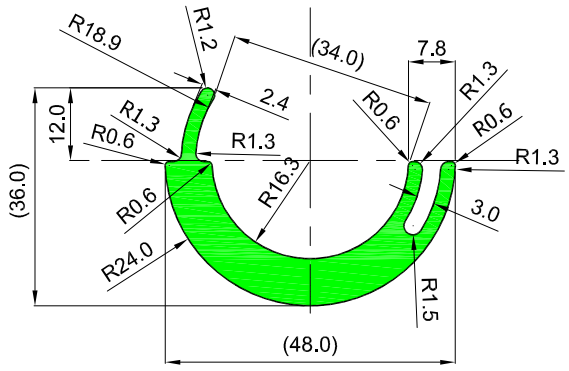

SEC NO	WEIGHT kg/m
K7115	1.314

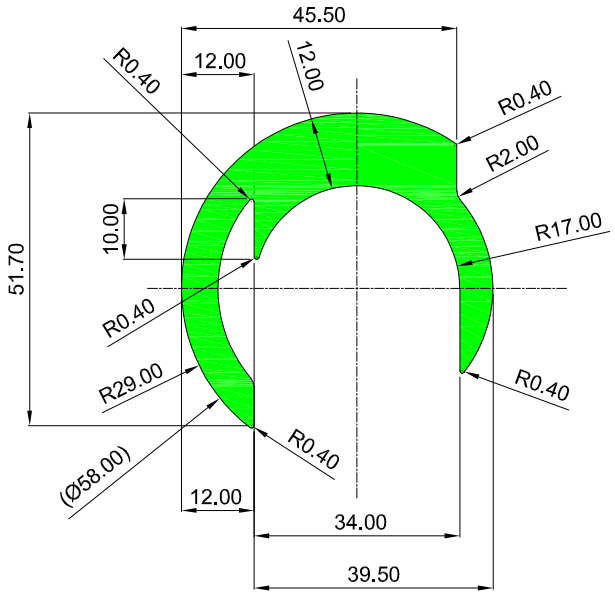

SEC NO	WEIGHT kg/m
K7143	2.315

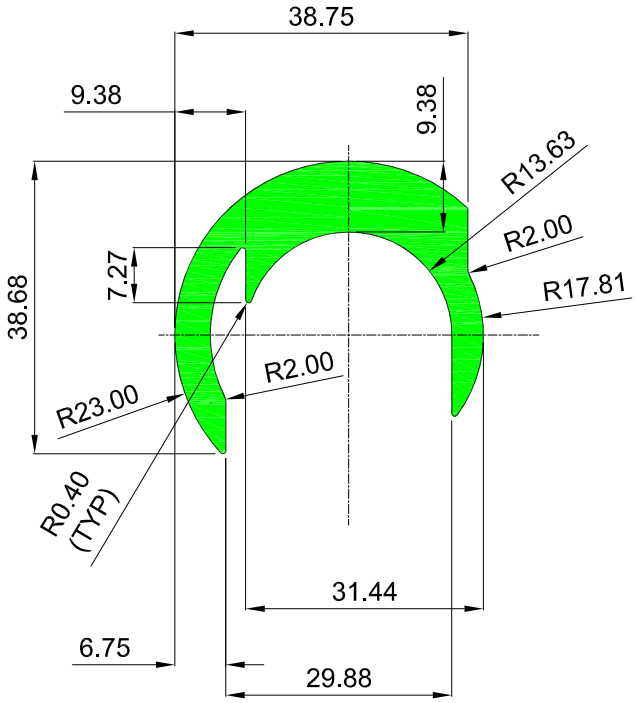

SEC NO	WEIGHT kg/m
K7240	1.433

COMMERCIAL

COMMERCIAL

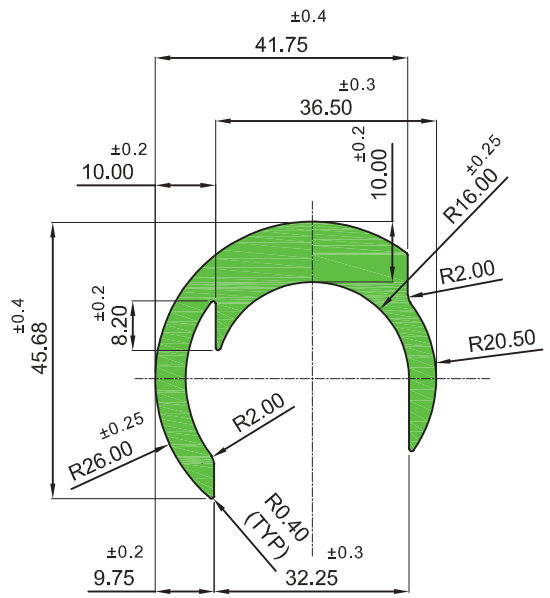

SEC NO	WEIGHT kg/m
K7317	1.754

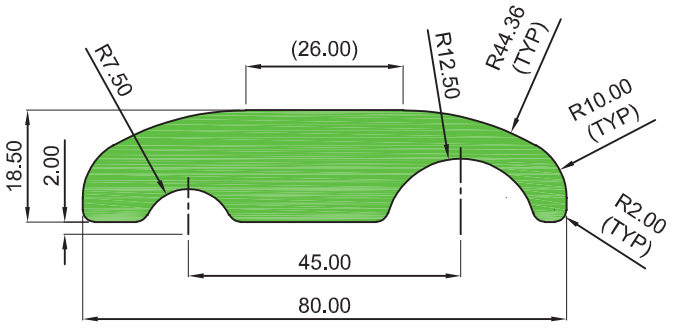

SEC NO	WEIGHT kg/m
K7439	2.892

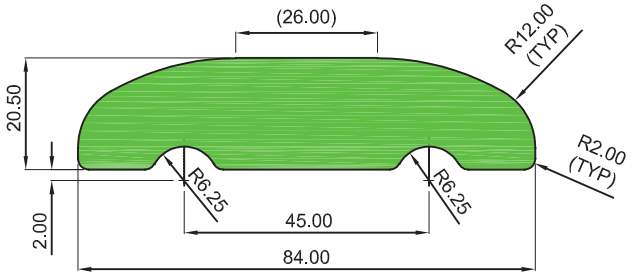

SEC NO	WEIGHT kg/m
K7505	3.901

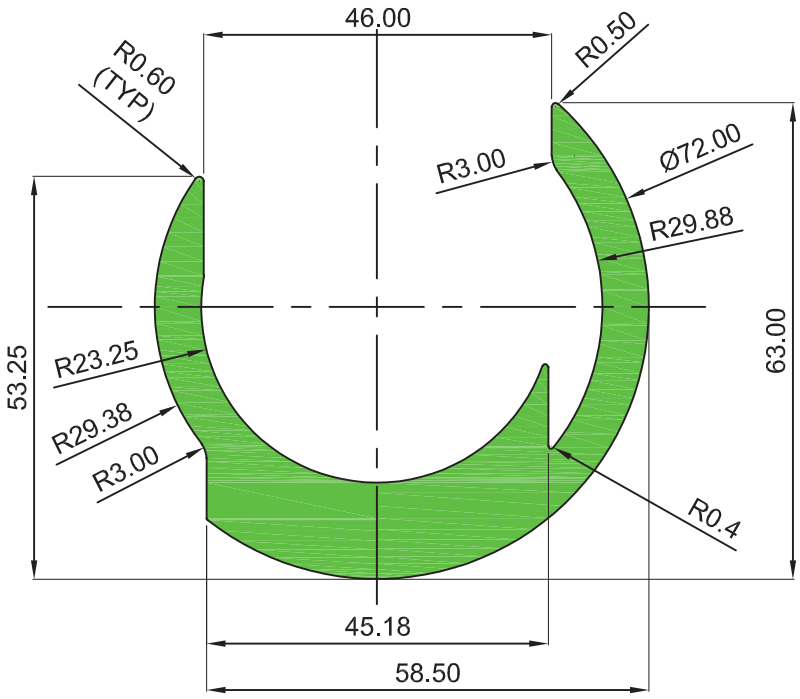

SEC NO	WEIGHT kg/m
K7531	3.121

COMMERCIAL

COMMERCIAL

KMC ALUMINIUM

COMMERCIAL

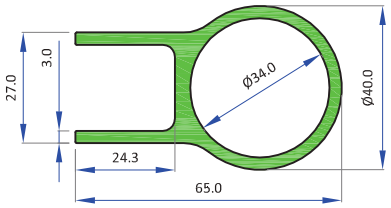

SEC NO	WT/RANGE/12'
8268	5.023 - 6.028

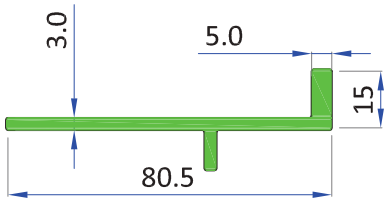

SEC NO	WT/RANGE/12'
8035	3.050-3.490

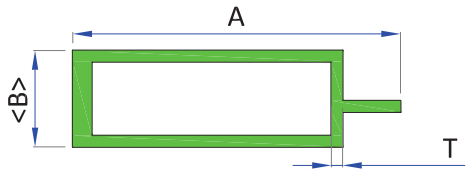

SEC NO	A	B	T	WT/RANGE/12'
7078	85.00	25.00	2.90	5.510-6.330

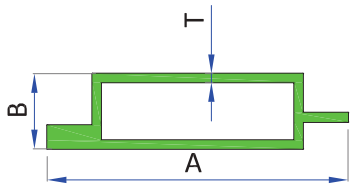

SECNO	A	B	T	WT/RANGE/12'
7077	100.0	25.0	2.90	6.500-7.000

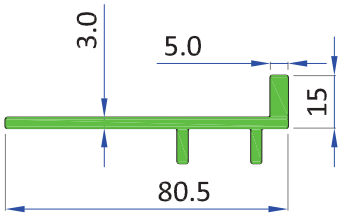

SEC NO	WT/RANGE/12'
8036	3.330-3.800

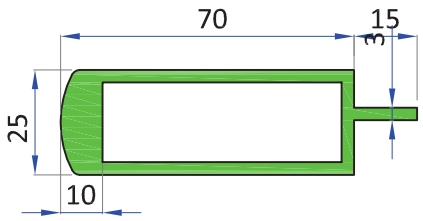

SEC NO	WT/RANGE/12'
6015	6.310-7.210

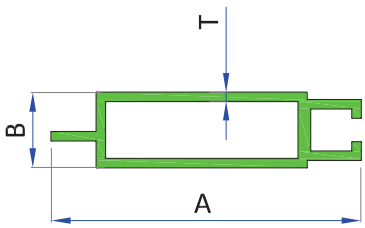

SECNO	A	B	T	WT/RANGE/12'
7076	103.0	25.0	2.90	6.650-7.120

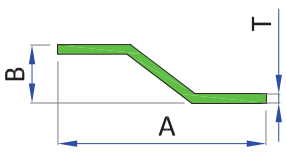

SEC NO	A	B	T	WT/RANGE/12
7075	45.00	12.5	1.90	0.860-0.950

COMMERCIAL

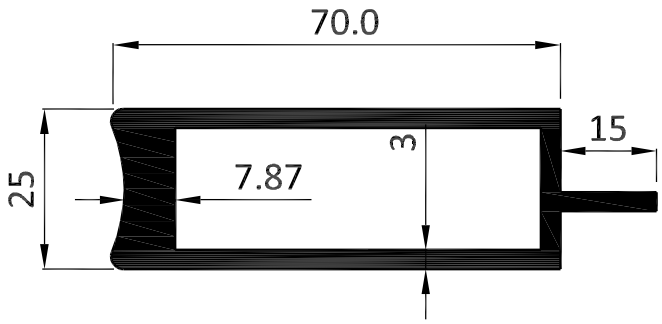

SEC NO	WT/RANGE/12'
6016	6.280-7.180

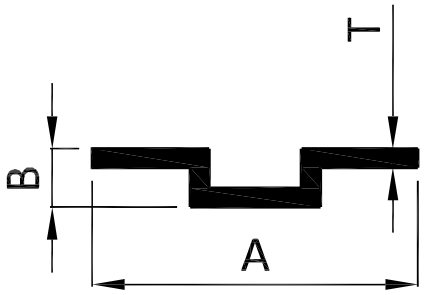

SECNO	A	B	T	WT/RANGE/12'
7074	50.00	9.00	2.9	1.720-1.840

COMMERCIAL

COMMERCIAL

KMC ALUMINIUM

COMMERCIAL

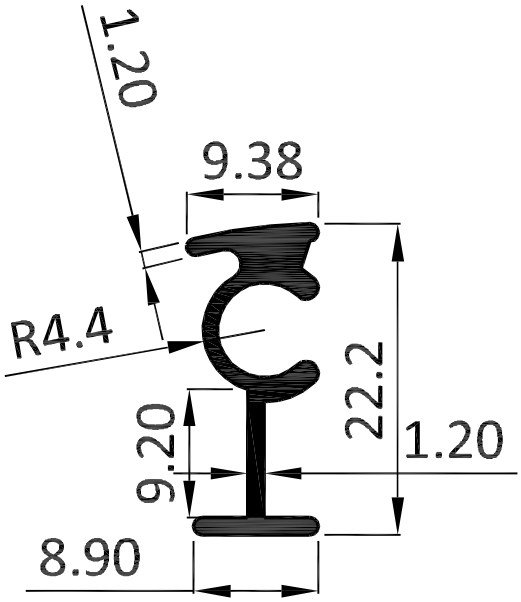

SEC NO	WT/RANGE/12'
5305	0.583- 0.699

COMMERCIAL

COMMERCIAL

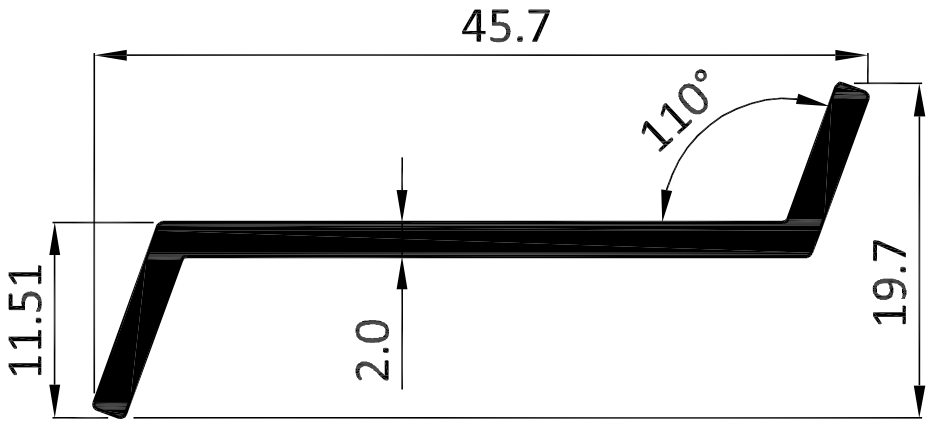

SEC NO	WT/RANGE/12'
5311	1.017 - 1.221

COMMERCIAL

KMC ALUMINIUM

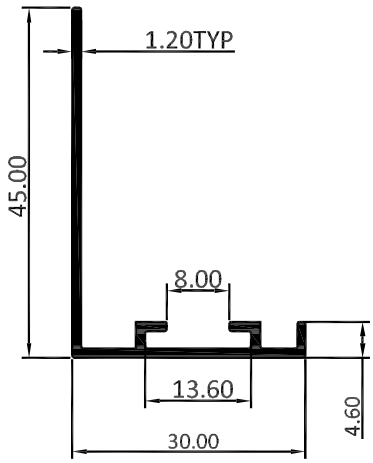

SEC NO	WT/RANGE/12'
5301	0.948- 1.138

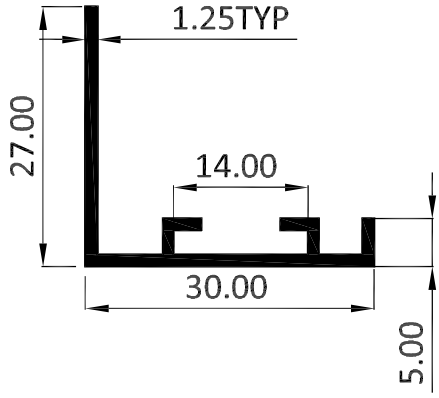

SEC NO	WT/RANGE/12'
5303	0.800- 0.960

COMMERCIAL
COMMERCIAL

KMC ALUMINIUM

COMMERCIAL

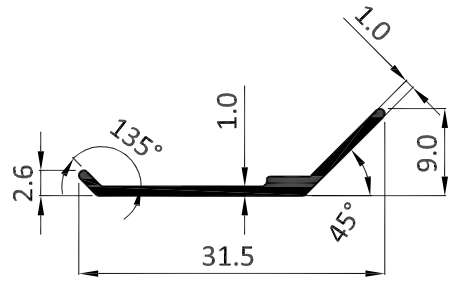

SEC NO	WT/RANGE/12'
5304	0.342- 0.411

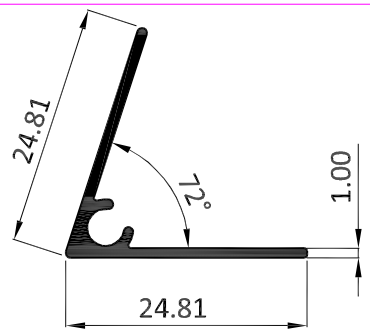

SEC NO	WT/RANGE/12'
5302	0.497- 0.596

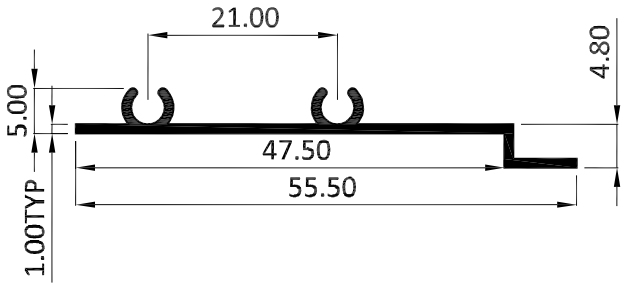

SEC NO	WT/RANGE/12'
5313	0.681 - 0.818

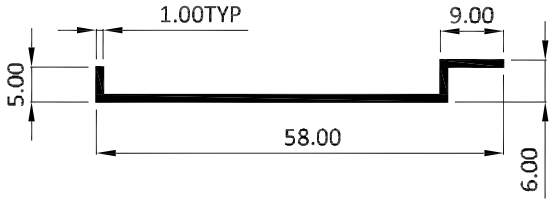

SEC NO	WT/RANGE/12'
5314	0.592 - 0.711

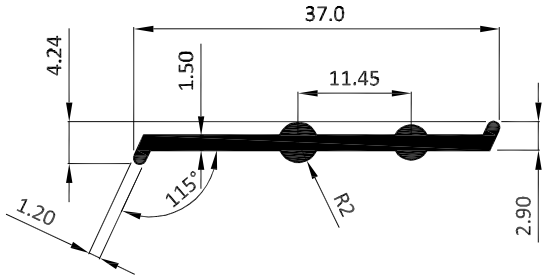

SEC NO	WT/RANGE/12'
5316	0.602- 0.723

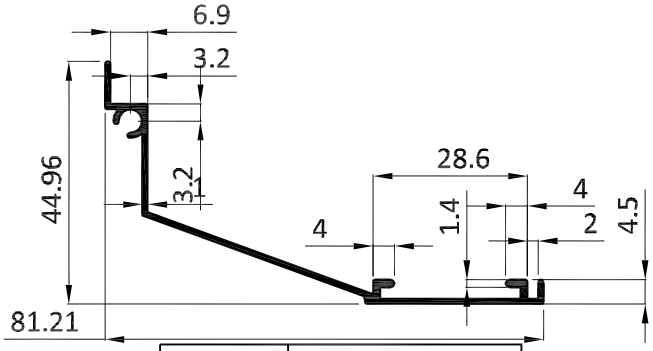

SEC NO	WEIGHT kg/m
6094A	0.379

COMMERCIAL

KMC ALUMINIUM

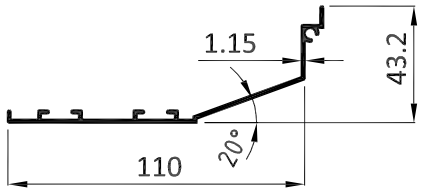

SEC NO	WT/RANGE/12'
6157	2.000-2.300

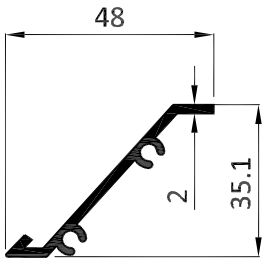

SEC NO	WT/RANGE/12'
5004	1.450-1.750

COMMERCIAL

COMMERCIAL

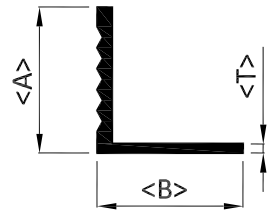

SEC NO	A	B	T	WT/RANGE/12'
1303	23.7	23.7	1.5	0.720 - 0.850

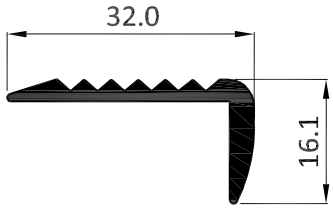

SEC NO	WT/RANGE/12'
6280	0.950-1.250

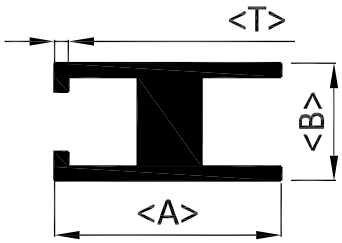

SEC NO	A	B	T	WT/RANGE/12'
4215	24.00	12.80	1.60	1.300 - 1.500

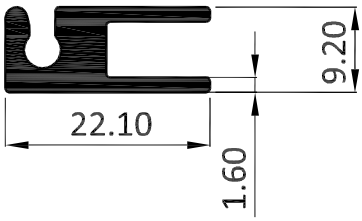

SEC NO	WT/RANGE/12'
3099	1.100 - 1.350

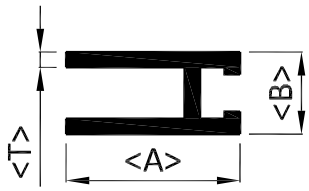

SEC NO	A	B	T	WT/RANGE/12'
1748	17.00	8.00	1.20	0.500 - 0.550

COMMERCIAL

COMMERCIAL

KMC ALUMINIUM

COMMERCIAL

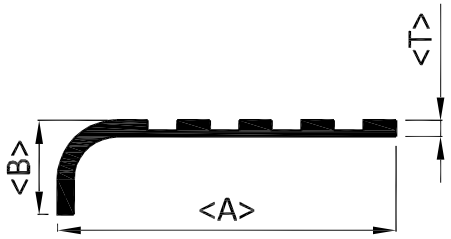

SEC NO	A	B	T	WT/RANGE/12'
4211	38.1	16.50	2.50	1.050 - 1.200
4213	57.15	15.88	2.70	1.250 - 1.400

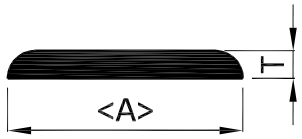

SECNO	A	T	WT/RANGE/12'
4200	25.40	3.00	0.600 - 0.750

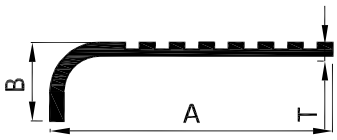

SEC NO	A	B	T	WT/RANGE/12'
4214	57.15	15.88	2.7	1.350 - 1.550
4214L	57.15	15.88	2.0	1.050-1.300

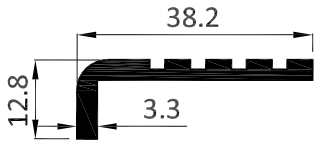

SEC NO	WT/RANGE/12'
4216	1.250 - 1.450

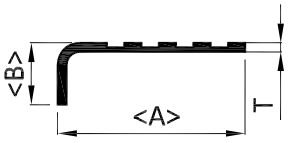

SEC NO	A	B	T	WT/RANGE/12'
4212	38.10	12.50	1.80	0.625 - 0.750

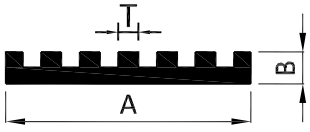

SEC NO	A	B	T	WT/RANGE/12'
4217	31.75	4.10	2.60	0.900 - 1.000

COMMERCIAL

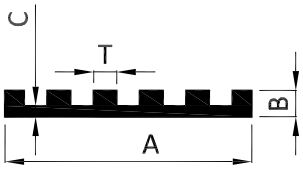

SEC NO	A	B	C	T	WT/RANGE/12'
4218	32.0	3.40	1.7	3.00	0.800 - 1.000
4218/L	32.0	3.00	1.0	3.00	0.600 - 0.700
4219	32.0	3.40	1.4	3.00	0.700 - 0.800

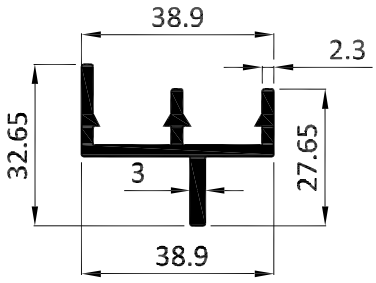

SEC NO	WT/RANGE/12'
3112	1.950 - 2.300

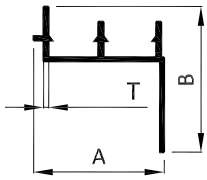

SEC NO	A	B	T	WT/RANGE/12'
4243(L)	43.20	45.00	1.45	1.600 - 1.800
4243(M)	43.30	45.00	1.90	2.100 - 2.400
4243(H)	43.30	45.00	2.30	2.400 - 2.600

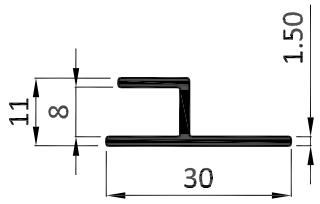

SEC NO	WT/RANGE/12'
3078	0.720 - 0.820

COMMERCIAL

COMMERCIAL

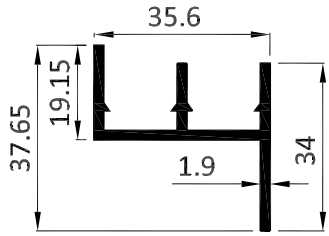

SEC NO	WT/RANGE/12'
3070	2.000-2.300

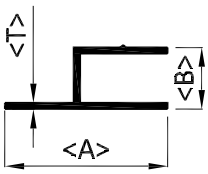

SEC NO	A	B	T	WT/RANGE/12'
4234	33.00	12.50	1.25	0.750 - 0.950

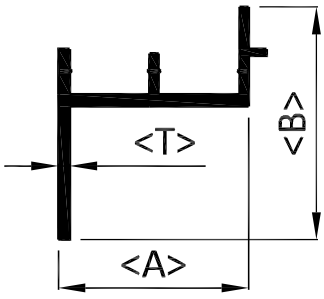

SEC NO	A	B	T	WT/RANGE/12'
4244	43.00	52.50	2.60	2.800 - 3.200
4246	40.25	51.80	3.00	3.050 - 3.350

COMMERCIAL

COMMERCIAL

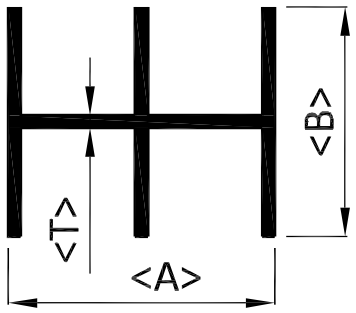

SEC NO	A	B	T	WT/RANGE/12'
4245	36.00	31.00	1.70	2.000 - 2.300

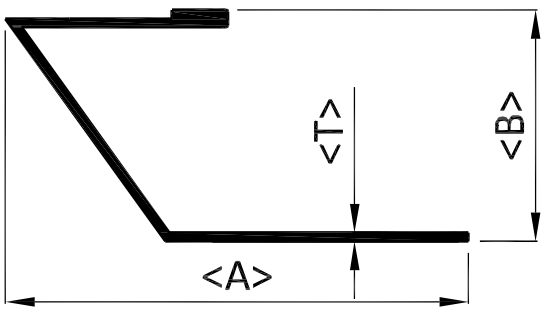

SEC NO	A	B	T	WT/RANGE/12'
4319	55.50	25.00	1.10	0.920-1.100
4340	50.00	25.00	0.90	0.700-0.900

COMMERCIAL

COMMERCIAL

KMC ALUMINIUM

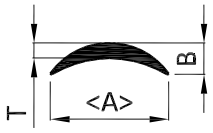

SEC NO	A	B	T	WT/RANGE/12'
4301	24.00	5.40	2.10	0.370 - 0.400
4302	24.00	5.85	2.65	0.470 - 0.500
4303	24.00	6.32	3.15	0.580 - 0.620
4304	31.96	6.25	2.00	0.589 - 0.706

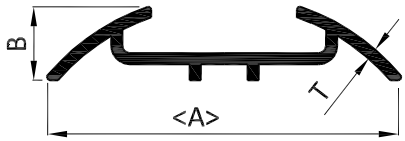

SEC NO	A	B	T	WT/RANGE/12'
4309	52.40	13.80	1.00	1.000 - 1.200
4320	52.40	13.80	1.75	1.600 - 1.900

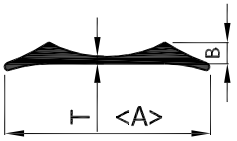

SEC NO	A	B	T	WT/RANGE/12'
4336	25.00	3.70	0.80	0.325 - 0.425
4337	25.20	3.70	2.60	0.575 - 0.675

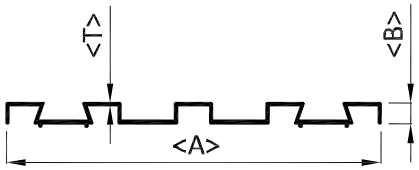

SEC NO	A	B	T	WT/RANGE/12'
4321	126.50	7.00	0.80	1.700-1.900
4322	126.50	7.00	1.20	2.150-2.540

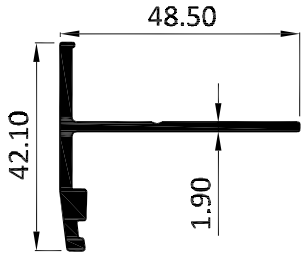

SEC NO	W.T. RANGE/12'
4346	1.850-2.100 Kg/12'

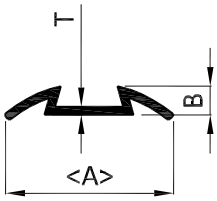

SEC NO	A	B	T	WT/RANGE/12'
4324	30.00	4.80	0.52	0.180-0.270
4325	30.00	5.0	0.80	0.300-0.400
4326	30.00	4.90	1.05	0.410-0.470
4327	30.00	5.71	1.20	0.480-0.530
4328	30.00	5.00	1.50	0.600-0.655

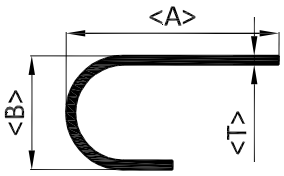

SEC NO	A	B	T	WT/RANGE/12'
4315	25.00	18.50	1.20	0.550-0.650
4316	25.00	18.50	1.60	0.850-1.000
4317	37.50	18.50	1.50	0.825-0.950

COMMERCIAL

COMMERCIAL

ALL DIMENSIONS ARE IN MM

KMC ALUMINIUM

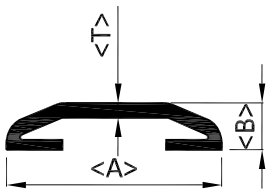

SEC NO	A	B	T	WT/RANGE/12'
4335	43.6	9.5	3.0	1.650 - 1.850

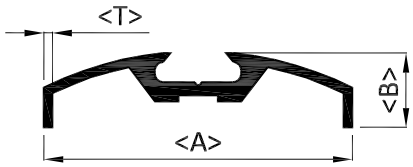

SEC NO	A	B	T	WT/RANGE/12'
4311	50.00	12.00	0.80	0.950 - 1.200
4314	50.00	12.00	2.15	1.600 - 1.900

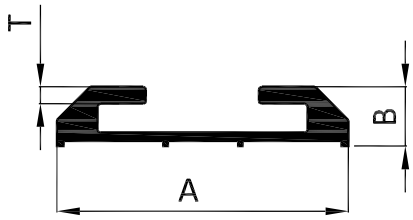

SEC NO	A	B	T	WT/RANGE/12'
4339	39.40	8.00	2.27	0.950 - 1.200

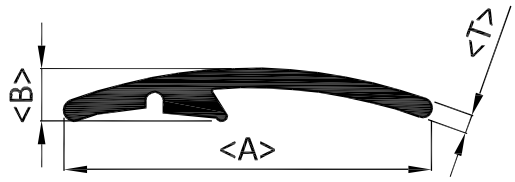

SEC NO	A	B	T	WT/RANGE/12'
4344	49.70	7.00	2.50	1.500 - 1.700

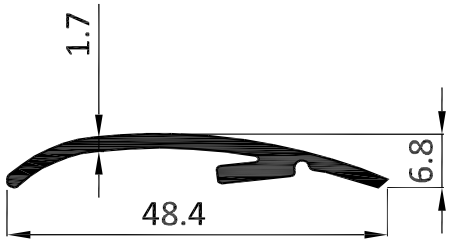

SEC NO	WT/RANGE/12'
6281	1.040-1.240

COMMERCIAL

COMMERCIAL

KMC ALUMINIUM

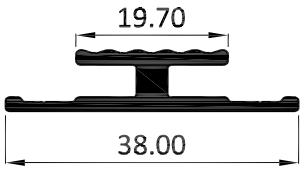

SEC NO	WT/RANGE/12'
6140	1.050-1.200

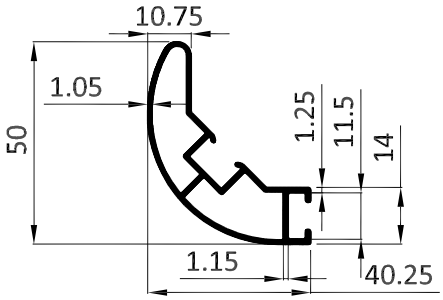

SEC NO	WT/RANGE/12'
6197	1.850 - 2.150

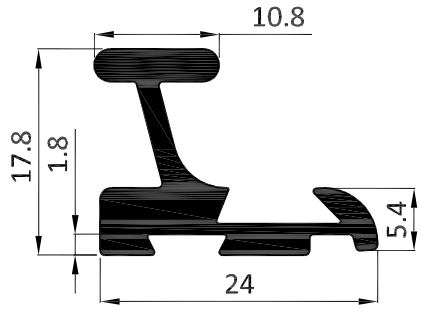

SEC NO	WT/RANGE/12'
6125	1.280-1.480

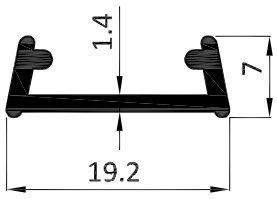

SEC NO	WT/RANGE/12'
6064	0.500-0.650

COMMERCIAL

COMMERCIAL

KMC ALUMINIUM

COMMERCIAL

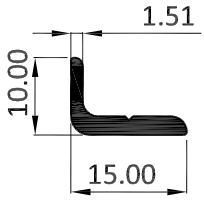

SEC NO	WT/RANGE/12'
6282	0.450-0.550

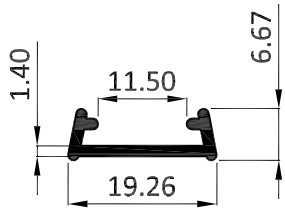

SEC NO	WT/RANGE/12'
6064	0.500 - 0.650

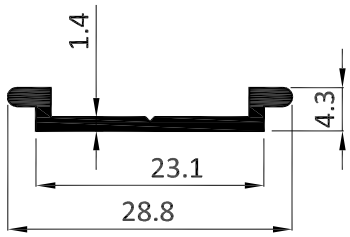

SEC NO	WT/RANGE/12'
3060	0.475 - 0.675

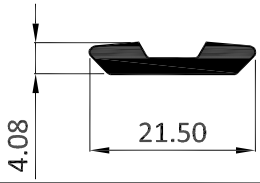

SEC NO	WT/RANGE/12'
6322	0.600-0.750

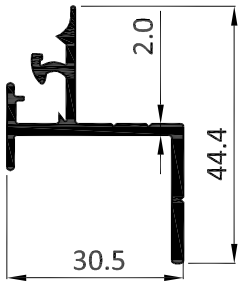

SEC NO	WT/RANGE/12'
6283	1.650-1.850

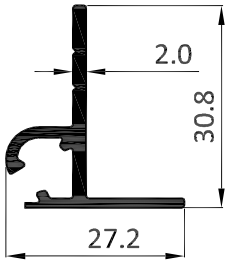

SEC NO	WT/RANGE/12'
6320	1.150-1.350

COMMERCIAL

KMC ALUMINIUM

COMMERCIAL

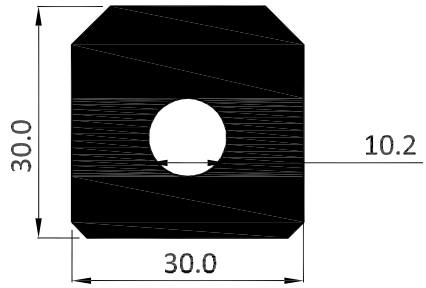

SEC NO	WT/RANGE/12'
6752	7.500 - 8.000

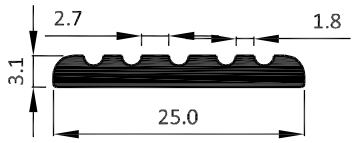

SEC NO	WT/RANGE/12'
4251	0.603 - 0.724

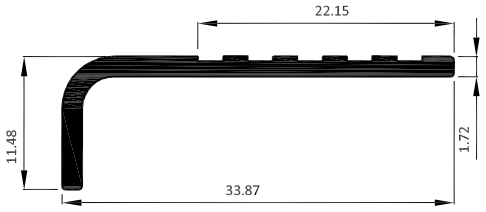

SEC NO	WT/RANGE/12'
4240	0.602 - 0.723

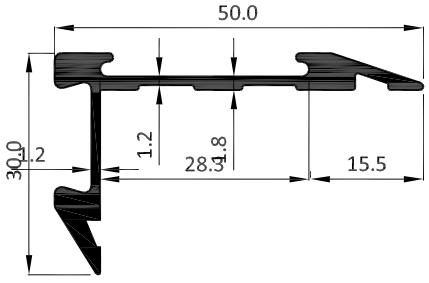

SEC NO	WT/RANGE/12'
8259	1.401 - 1.681

COMMERCIAL

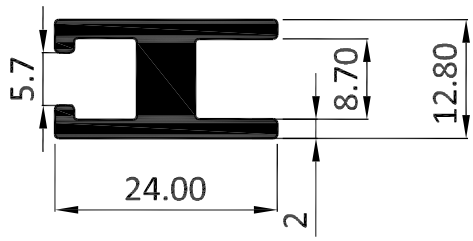

SEC NO	WT/RANGE/12'
8041	1.650 - 1.800

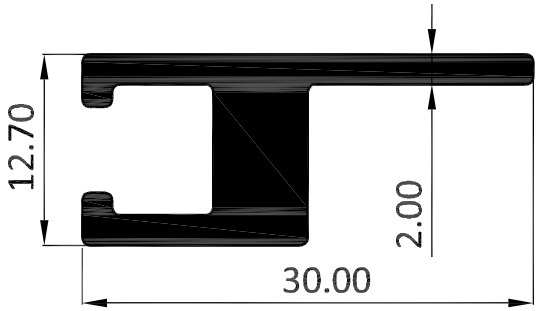

SEC NO	WT/RANGE/12'
8042	1.450 - 1.650

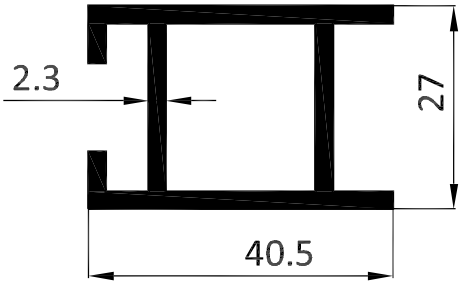

SEC NO	WT/RANGE/12'
8031	3.000 - 3.300

COMMERCIAL

COMMERCIAL

KMC ALUMINIUM

COMMERCIAL

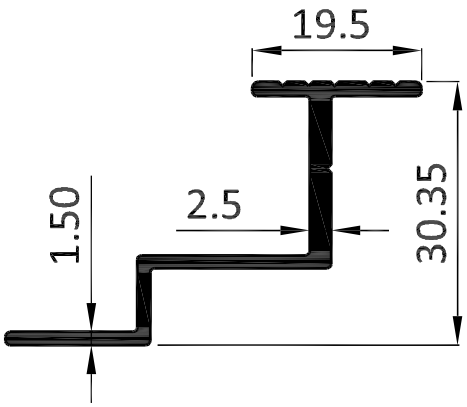

SEC NO	WT/RANGE/12'
6586	1.300 - 1.555

COMMERCIAL

COMMERCIAL

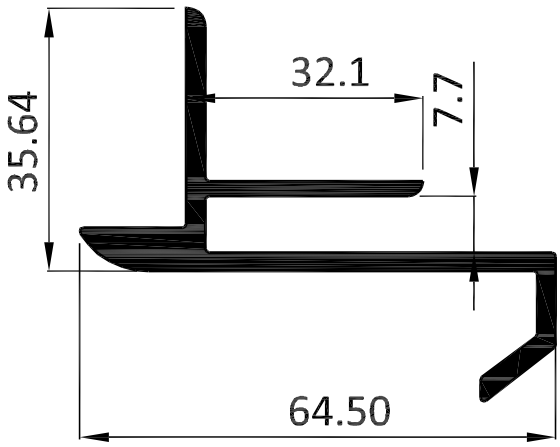

SEC NO	WT/RANGE/12'
6587	3.520 - 4.220

COMMERCIAL

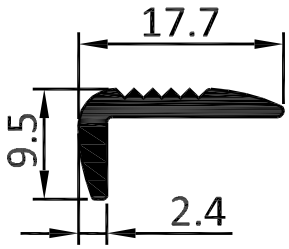

SEC NO	WT/RANGE/12'
6279	0.415 - 0.530

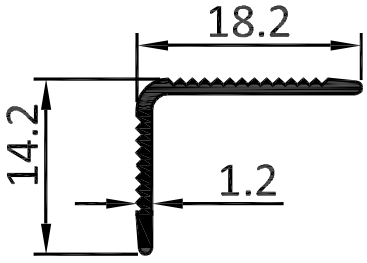

SEC NO	WT/RANGE/12'
1306	0.245 - 0.345

COMMERCIAL
COMMERCIAL

COMMERCIAL

COMMERCIAL

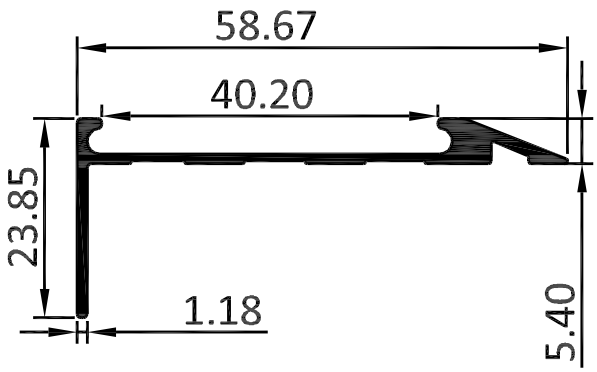

SEC NO	WT/RANGE/12'
8110	0.970 - 1.165

KMC ALUMINIUM

COMMERCIAL

COMMERCIAL

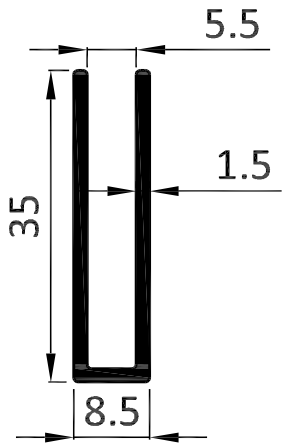

SEC NO	WT/RANGE/12'
8161	1.000 - 1.200

ALL DIMENSIONS ARE IN MM

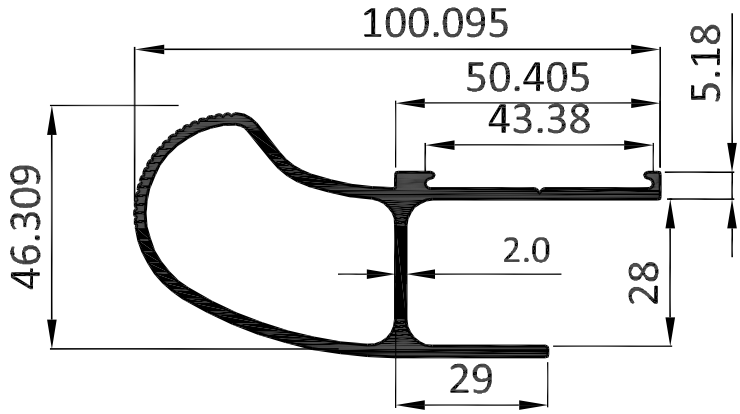

SEC NO	WT/RANGE/12'
8167	4.510 - 5.410

COMMERCIAL

COMMERCIAL

COMMERCIAL

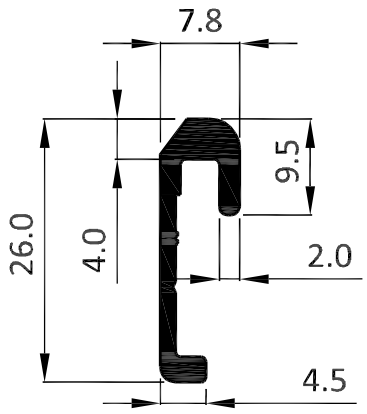

SEC NO	WT/RANGE/12'
8386	0.687 - 0.825

COMMERCIAL

COMMERCIAL

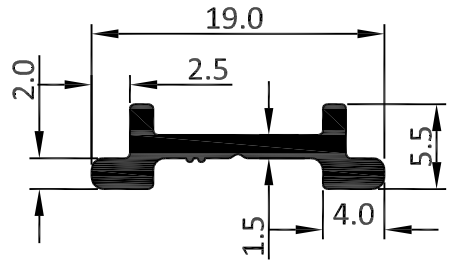

SEC NO	WT/RANGE/12'
8387	0.380 - 0.456

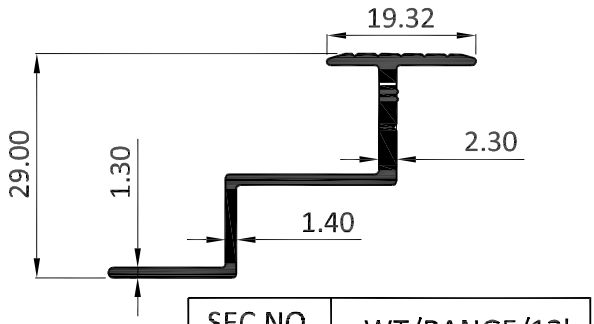

SEC NO	WT/RANGE/12'
8777	1.116-1.339

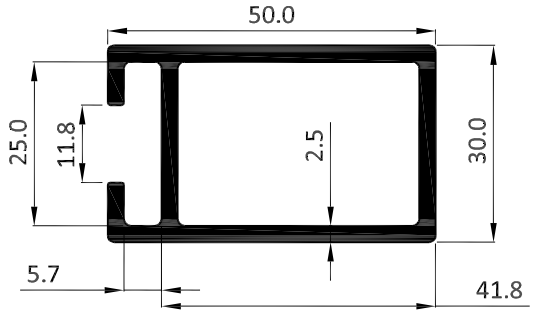

SEC NO	WT/RANGE/12'
8372	3.635 - 4.362

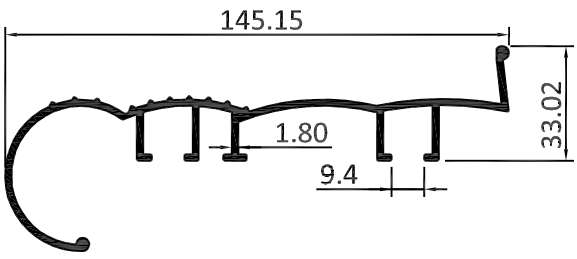

SEC NO	WT/RANGE/12'
6399	5.000 - 6.000

COMMERCIAL

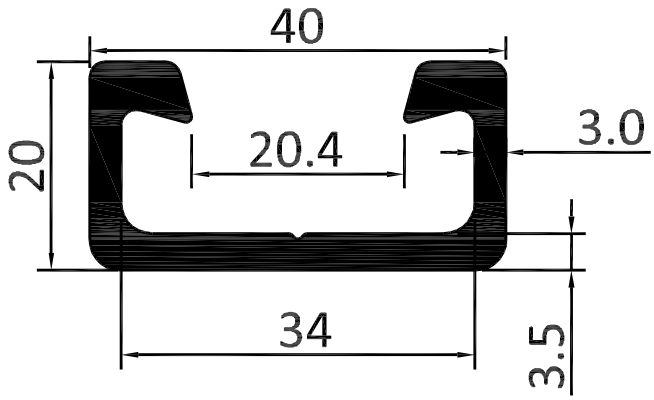

SEC NO	WT/RANGE/12'
8148	2.660 - 3.200

COMMERCIAL

COMMERCIAL

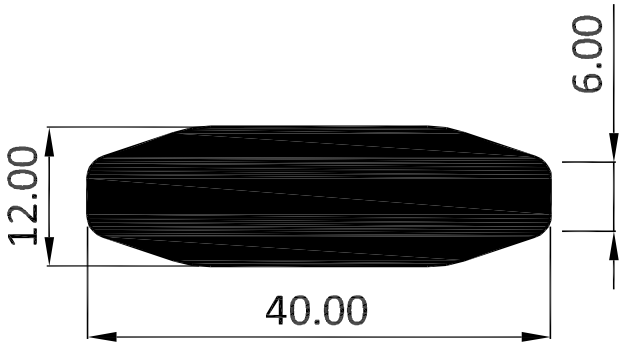

SEC NO	WT/RANGE/12'
6756	3.900 - 4.400

COMMERCIAL

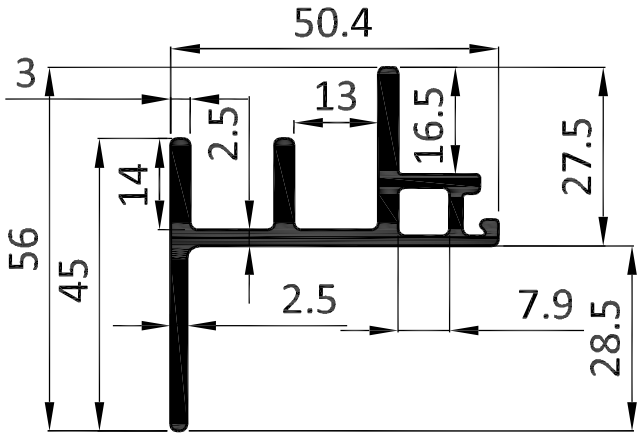

SEC NO	WT/RANGE/12'
8171	3.480 - 4.180

COMMERCIAL

COMMERCIAL

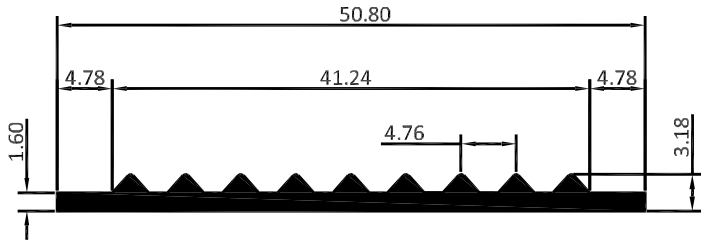

SEC NO	WEIGHT(Kg/m)
4306	0.285

COMMERCIAL

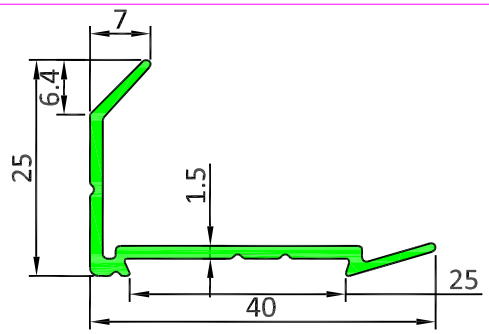

SEC NO	WEIGHT(Kg/m)
7099	0.259

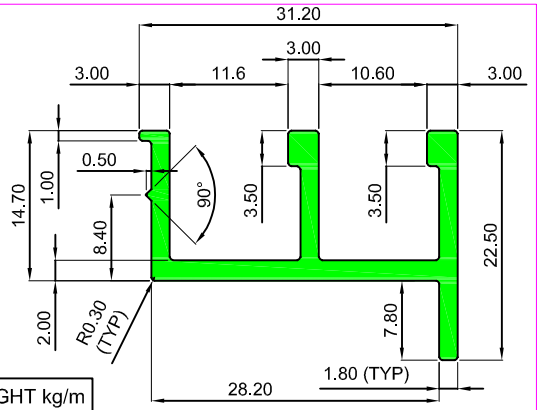

SEC NO	WEIGHT kg/m
K7116	0.417

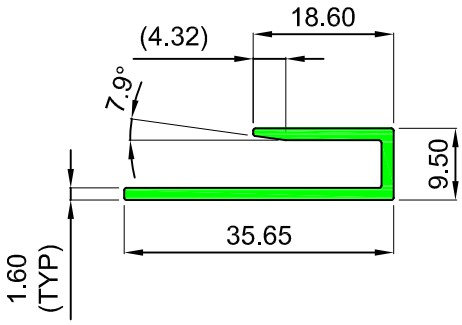

SEC NO	WEIGHT kg/m
K7686	0.257

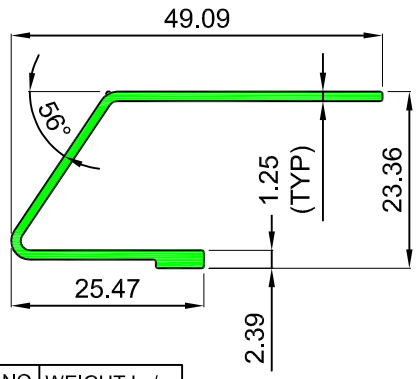

SEC NO	WEIGHT kg/m
K7706	0.305

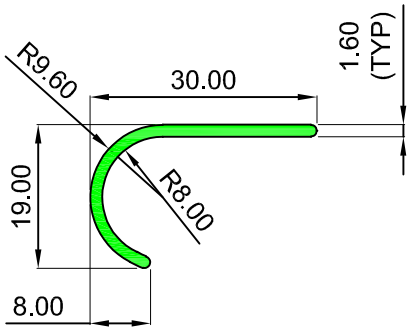

SEC NO	WEIGHT kg/m
K7711	0.199

COMMERCIAL

COMMERCIAL

KMC ALUMINIUM

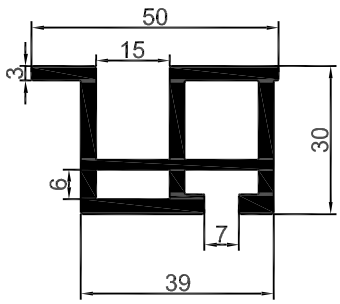

SEC NO	WT/RANGE/12'
6342	4.310 - 5.175

COMMERCIAL

COMMERCIAL

KMC ALUMINIUM

COMMON PROFILES - 1

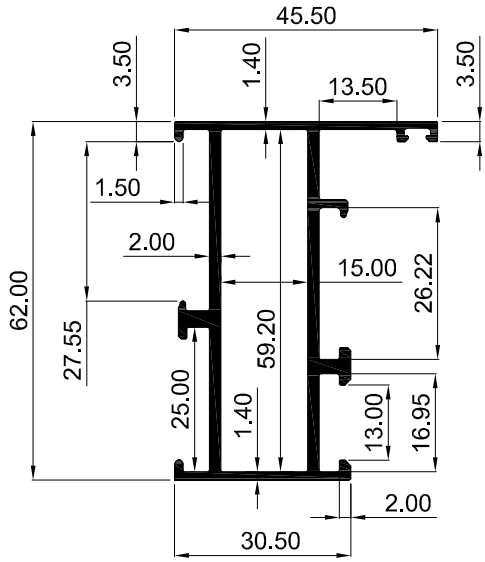

SEC NO	WEIGHT kg/m
K7145	1.117

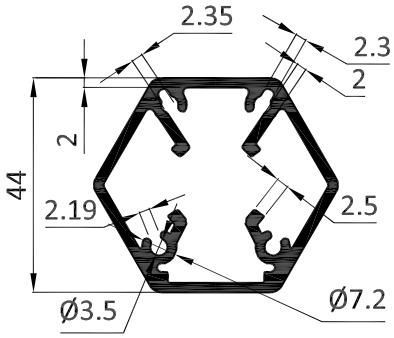

SEC NO	WEIGHT kg /mtr.
K6568	1.258

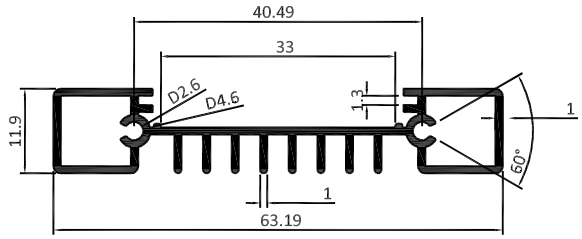

SEC NO	WEIGHT kg /mtr.
K6498	0.497

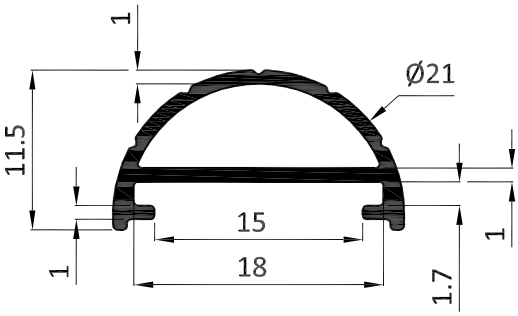

SEC NO	WEIGHT kg /mtr.
K6802	0.151

ALL DIMENSIONS ARE IN MM

KMC ALUMINIUM

COMMON PROFILES - 2

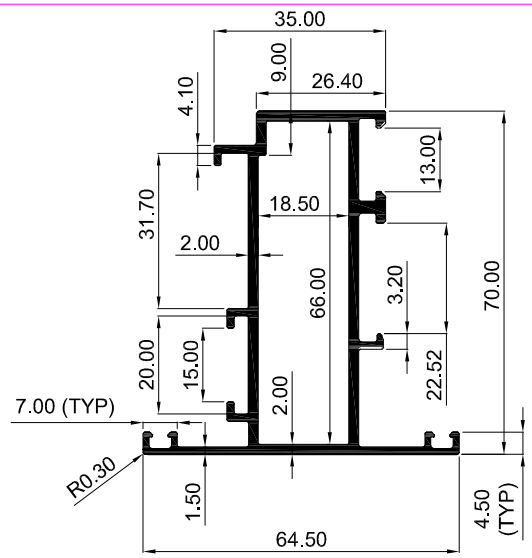

SEC NO	WEIGHT kg/m
K7146	1.394

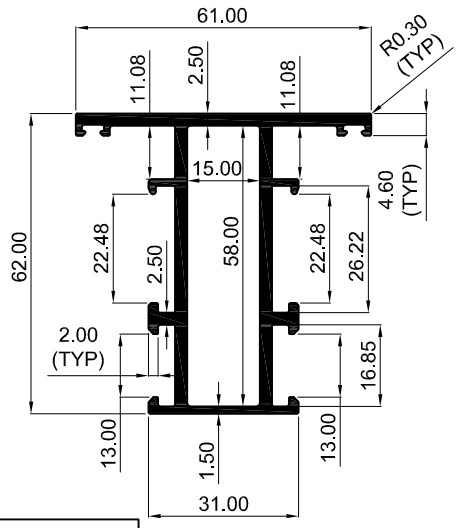

SEC NO	WEIGHT kg/m
K7147	1.556

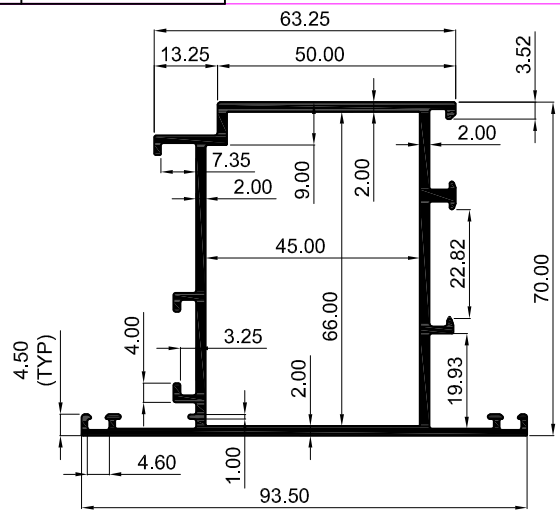

SEC NO	WEIGHT kg/m
K7148	1.707

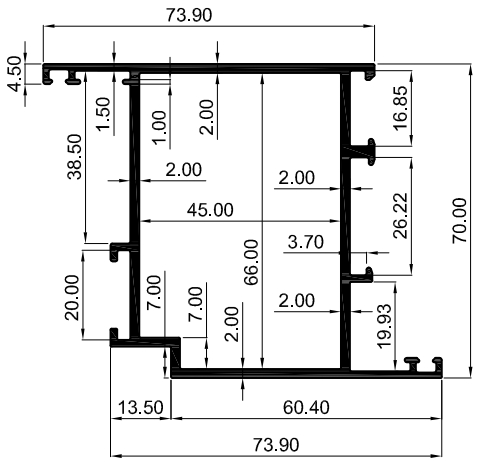

SEC NO	WEIGHT kg/m
K7149	1.637

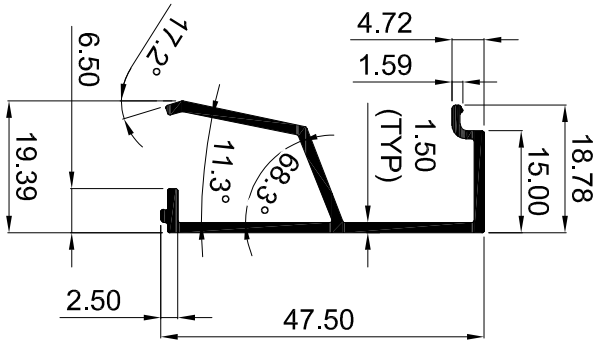

SEC NO	WEIGHT kg/m
K7150	0.435

ALL DIMENSIONS ARE IN MM

KMC ALUMINIUM

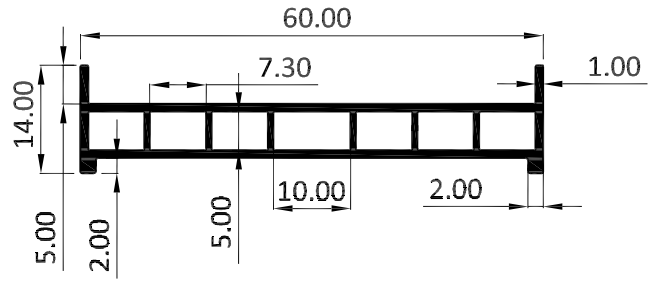

SEC NO	WT/RANGE/12'
16058	1.499 - 1.836

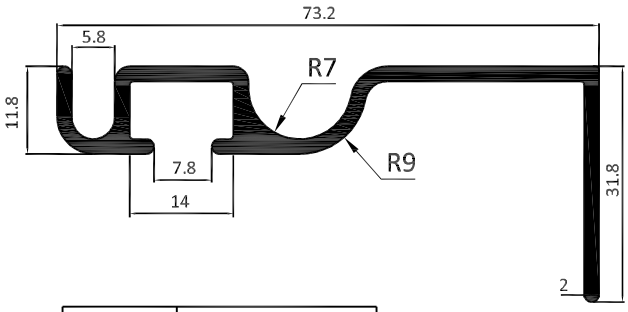

SEC NO	WEIGHT kg /mtr.
6571	0.789

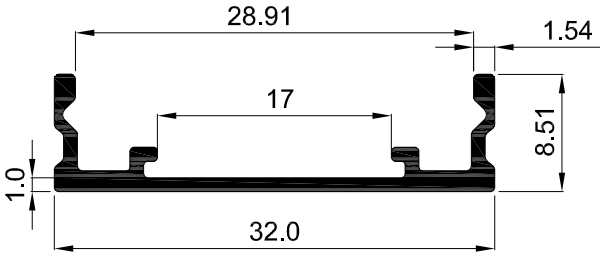

SEC NO	WEIGHT kg/m
K6967	0.164

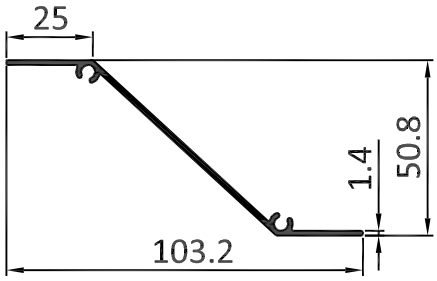

SEC.NO	WEIGHT (kg/m)
4652	0.524

KMC ALUMINIUM

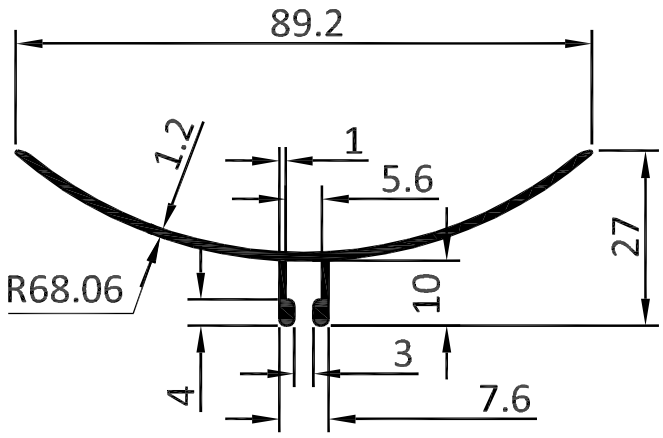

SEC NO	WEIGHT (kg/m)
6522	0.389

KMC ALUMINIUM

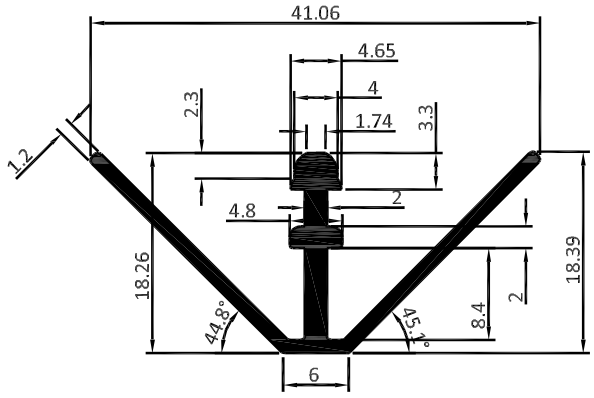

SEC NO	WEIGHT (kg/m)
6523	0.300

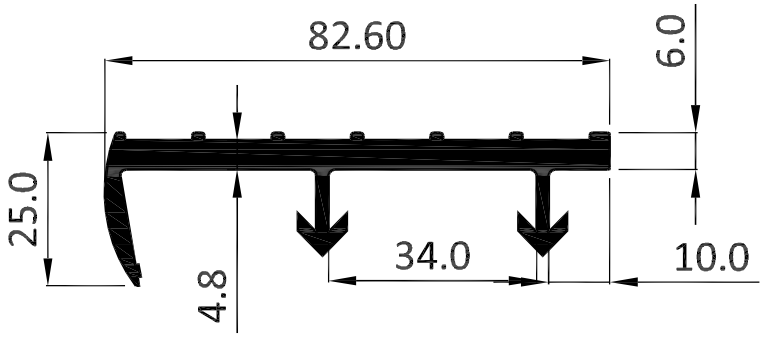

SEC NO	WT/RANGE/12'
6388	5.00 - 5.800

KMC ALUMINIUM

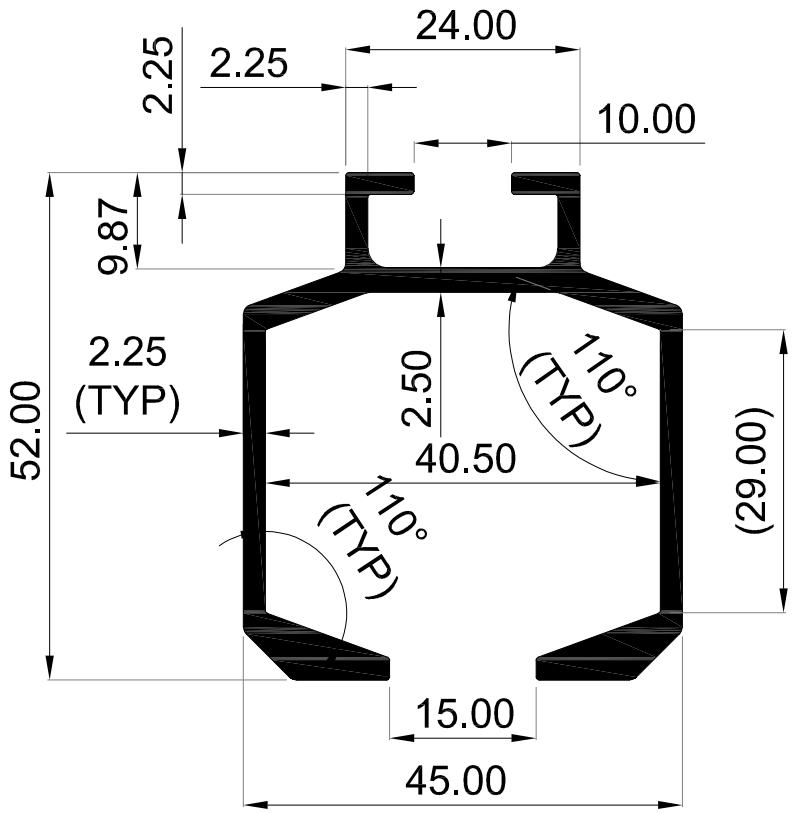

SEC NO	WEIGHT kg/m
K7249	1.219

KMC ALUMINIUM

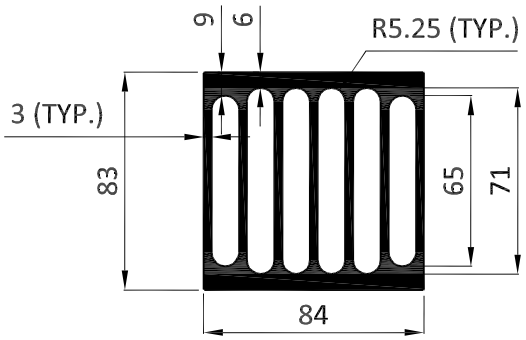

SEC NO	WEIGHT kg /mtr.
K6580	7.5

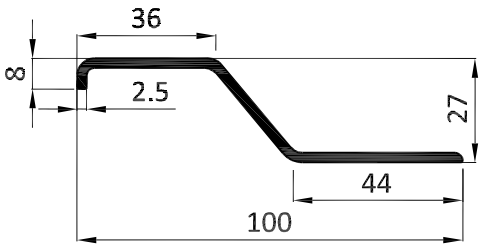

SEC NO	WEIGHT kg /mtr.
8960	2.543 - 3.051

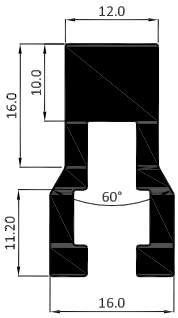

SEC NO	WEIGHT kg /mtr.
K6982	0.690

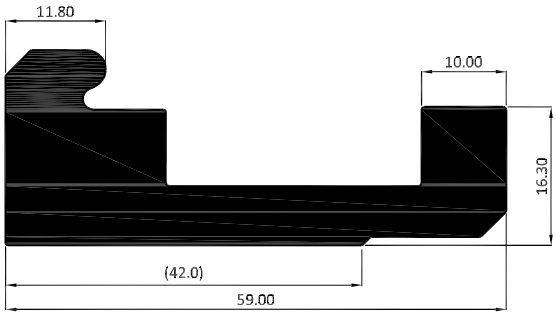

SEC NO	WEIGHT kg /mtr.
K6983	1.965

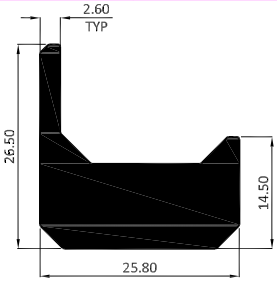

SEC NO	WEIGHT kg /mtr.
K6984	0.905

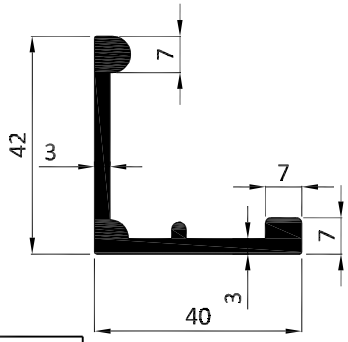

SEC NO	WEIGHT kg /mtr.
K6808	0.828

KMC ALUMINIUM

COMMON PROFILES - 8

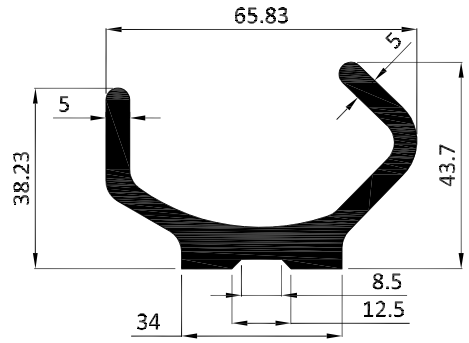

SEC NO	WEIGHT kg /mtr.
K6814	1.897

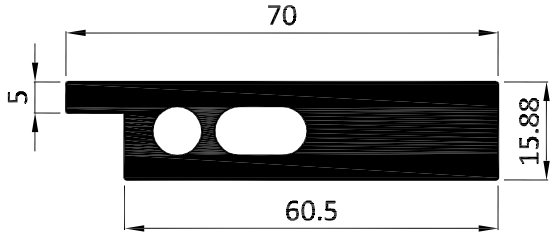

SEC. NO	WEIGHT(kg/m)
K6904	2.307

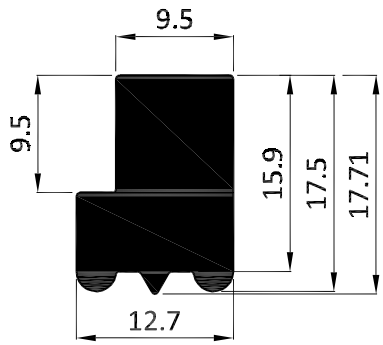

SEC. NO	WEIGHT(kg/m)
K6905	0.493

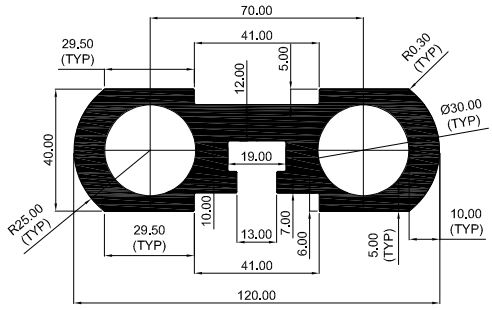

SEC NO	WEIGHT kg/m
K7154	6.612

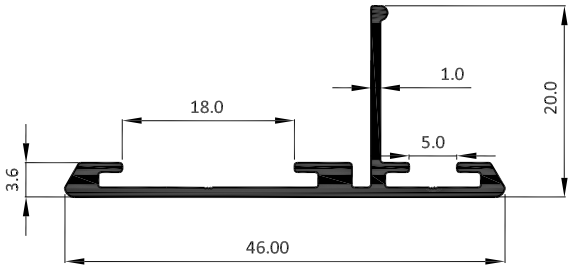

SEC NO	WT/RANGE/12'
8673	0.866 - 1.039

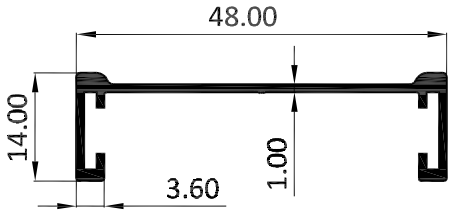

SEC NO	WT/RANGE/12'
8700	0.830- 0.996

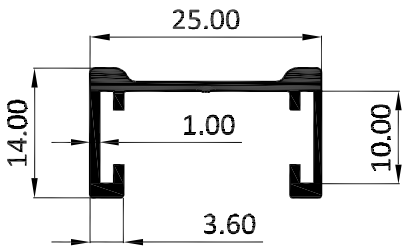

SEC NO	WT/RANGE/12'
8701	0.648- 0.778

ALL DIMENSIONS ARE IN MM

KMC ALUMINIUM

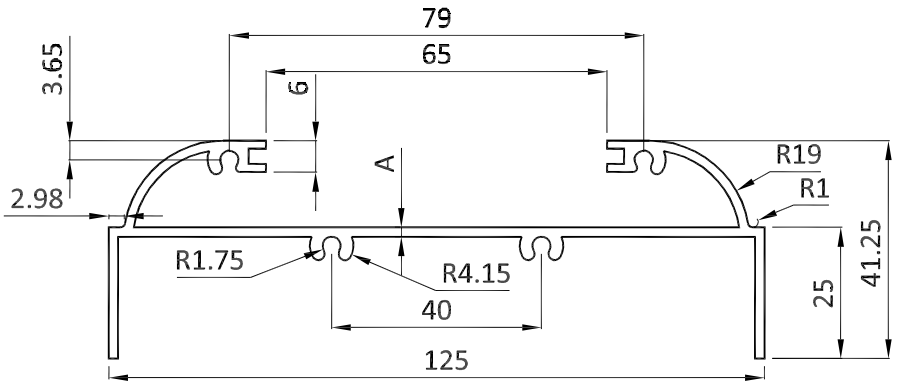

SEC NO	WT/RANGE/12'	A
8770	4.661 - 5.697	1.8
8770A	4.088 - 4.996	1.5

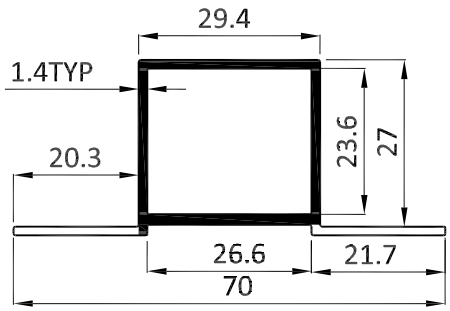

SEC NO	WT/RANGE/12'
8793	1.943 - 2.375

KMC ALUMINIUM

COMMON PROFILES - 10

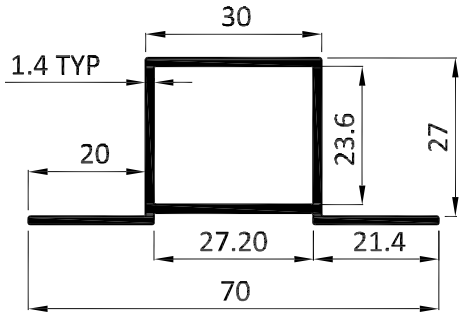

SEC NO	WT/RANGE/12'
8793A	1.881 - 2.299

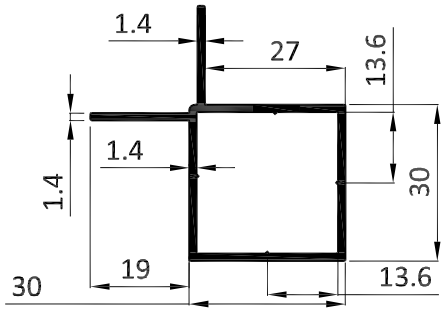

SEC NO	WT/RANGE/12'
8794	1.895 - 2.316

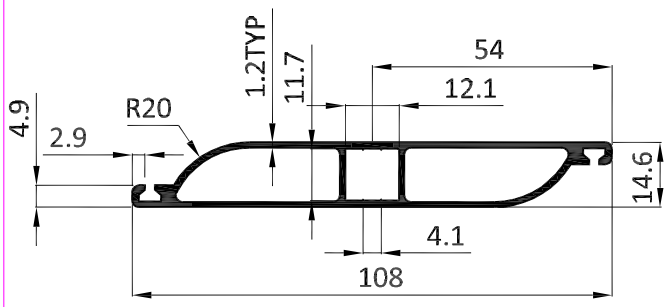

SEC NO	WT/RANGE/12'
8795	2.911 - 3.559

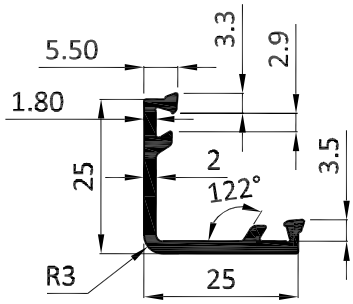

SEC NO	WT/RANGE/12'
8890	1.08 - 1.32

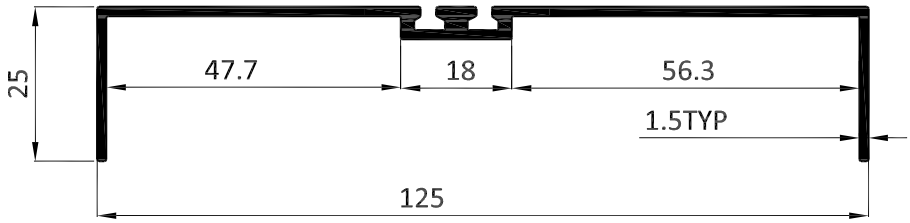

SEC NO	WT/RANGE/12'
8796	2.646 - 3.234

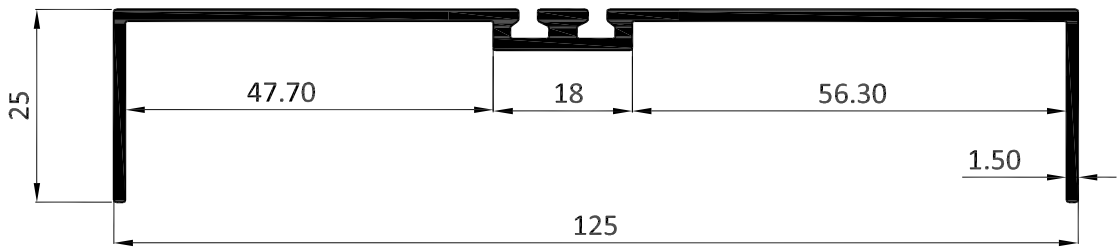

SEC NO	WEIGHT kg /mtr.
8796A	0.803

ALL DIMENSIONS ARE IN MM

KMC ALUMINIUM

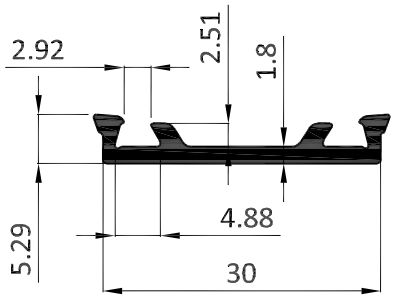

SEC NO	WT/RANGE/12'
8920	0.711 - 0.870

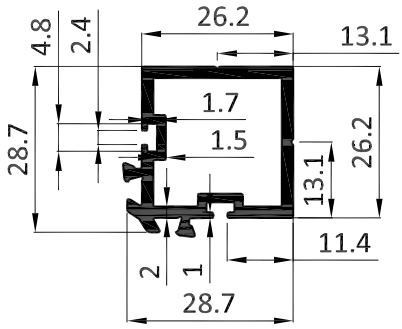

SEC NO	WT/RANGE/12'
8889	2.07 - 2.53

SEC NO	WT/RANGE/12'
8888	3.51 - 4.29

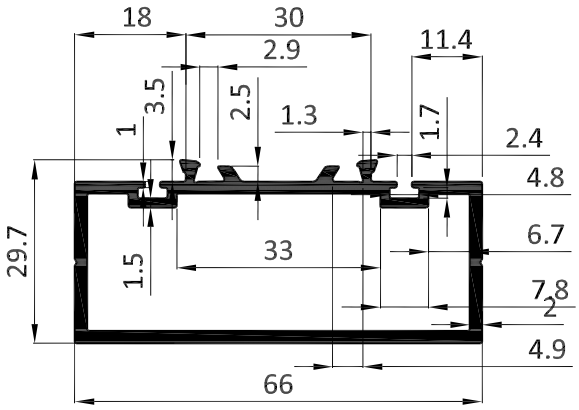

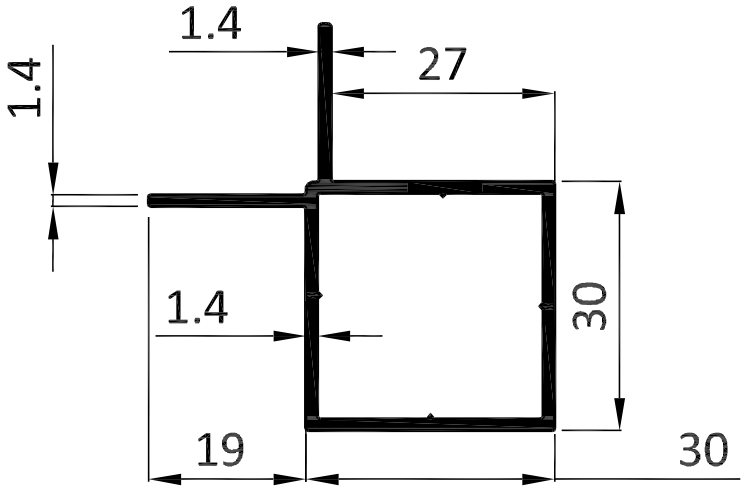

SEC NO	WEIGHT kg /mtr.
8794A	0.575

KMC ALUMINIUM

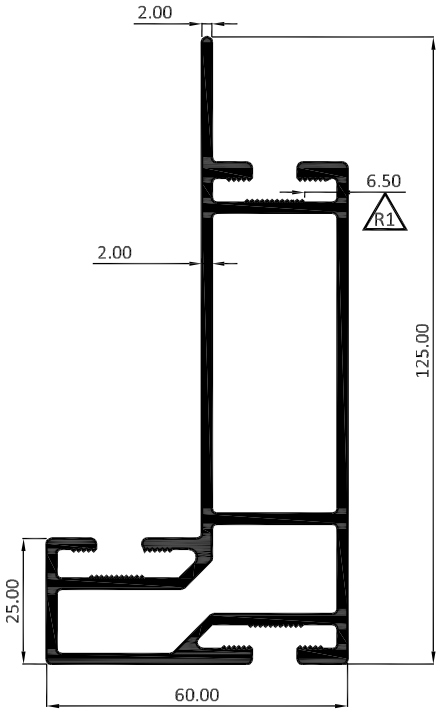

SEC NO	WEIGHT (kg/m)
K6990	2.468

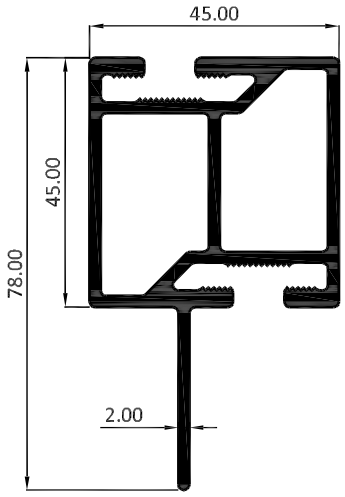

SEC NO	WEIGHT (kg/m)
6991	1.677

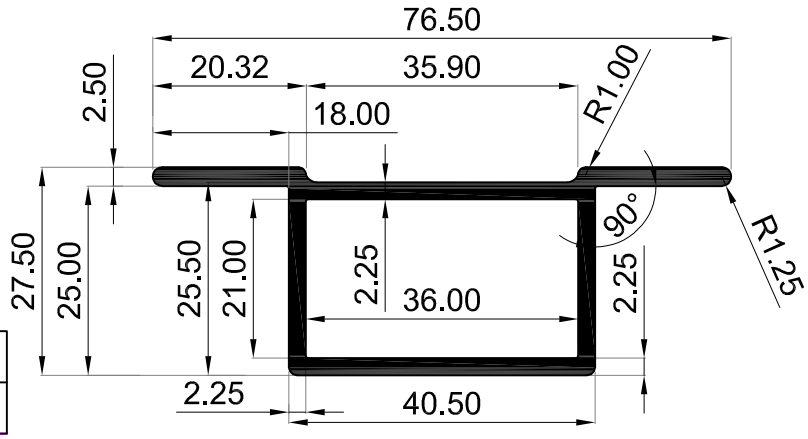

SEC NO	WEIGHT kg/m
K7042	1.015

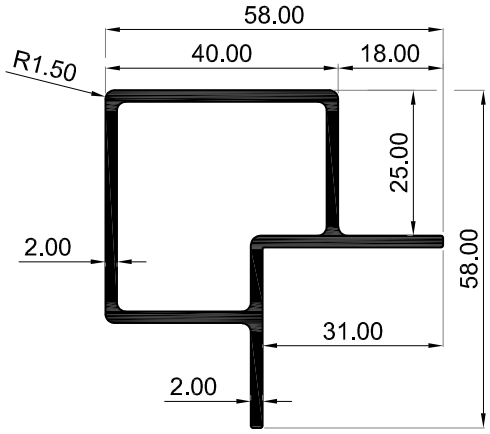

SEC NO	WEIGHT kg/m
K7043	1.023

KMC ALUMINIUM

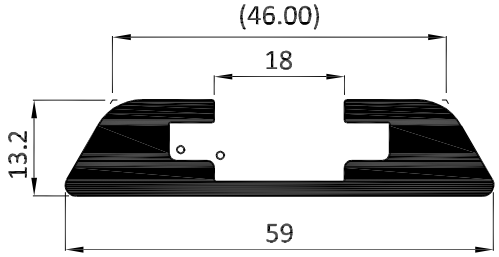

SEC NO	WEIGHT (kg/m)
K6970	1.170

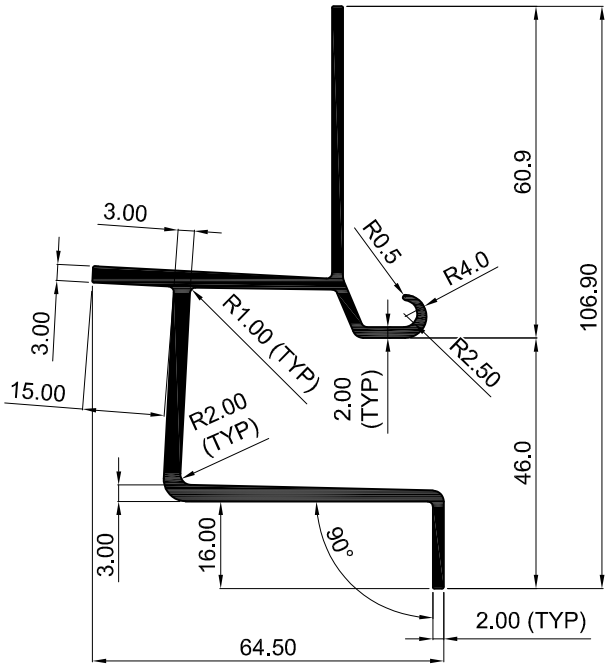

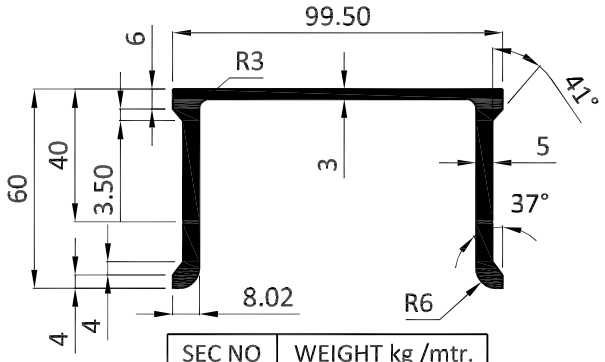

SEC NO	WEIGHT kg /mtr.
K6575	2.5

SEC NO	WEIGHT kg/m
K7313	1.488

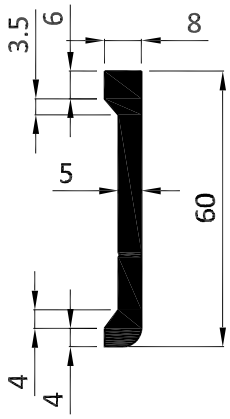

SEC NO	WEIGHT kg /mtr.
K6517	0.915

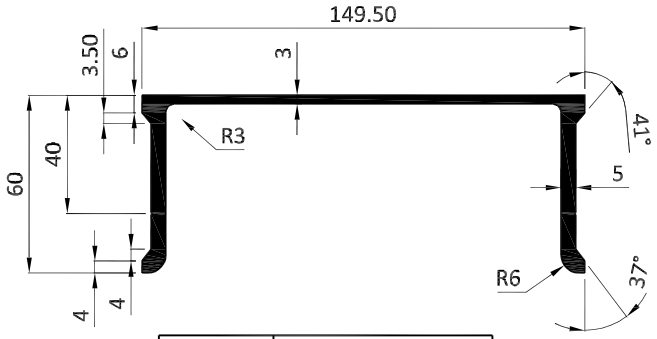

SEC NO	WEIGHT kg /mtr.
K6576	2.903

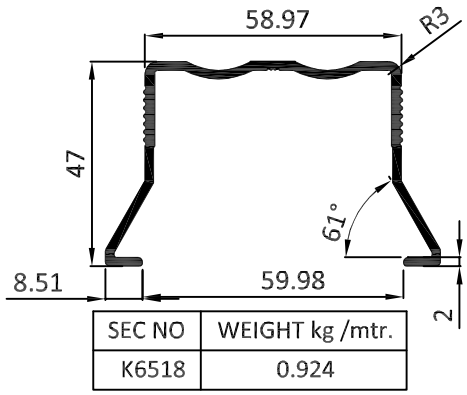

SEC NO	WEIGHT kg /mtr.
K6518	0.924

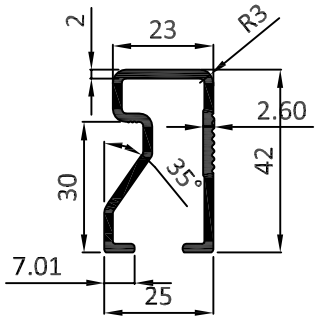

SEC NO	WEIGHT kg /mtr.
K6519	0.657

KMC ALUMINIUM

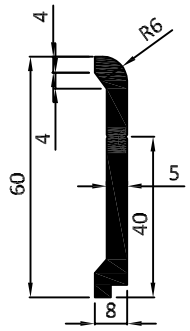

SEC NO	WEIGHT kg /mtr.
K6520	0.869

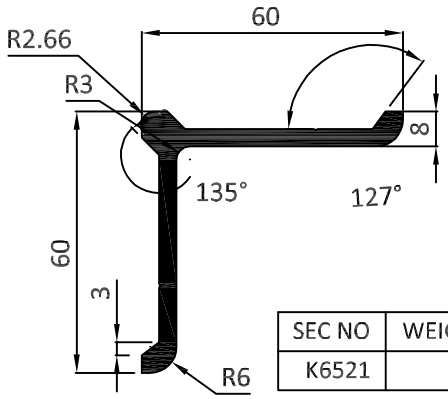

SEC NO	WEIGHT kg /mtr.
K6521	1.337

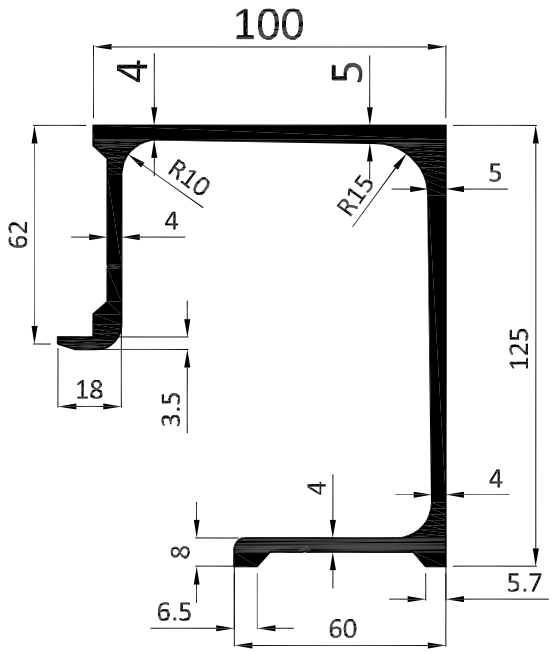

SEC NO	WEIGHT kg /mtr.
8864	4.510

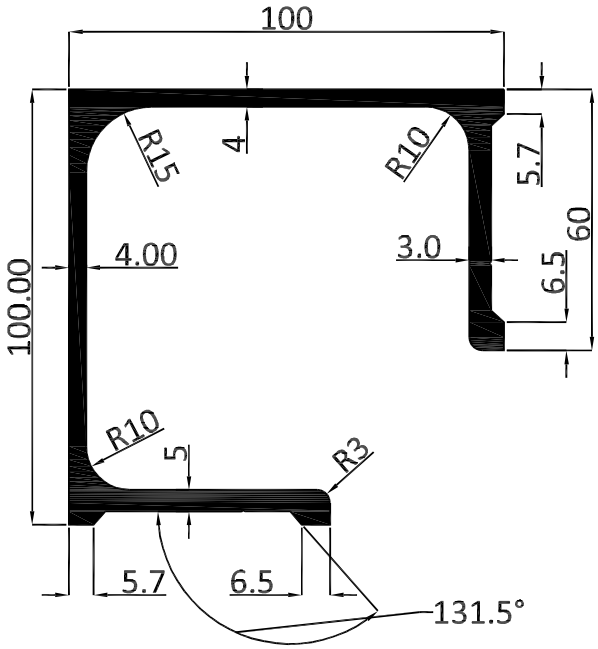

SEC NO	WEIGHT kg /mtr.
8866	4.040

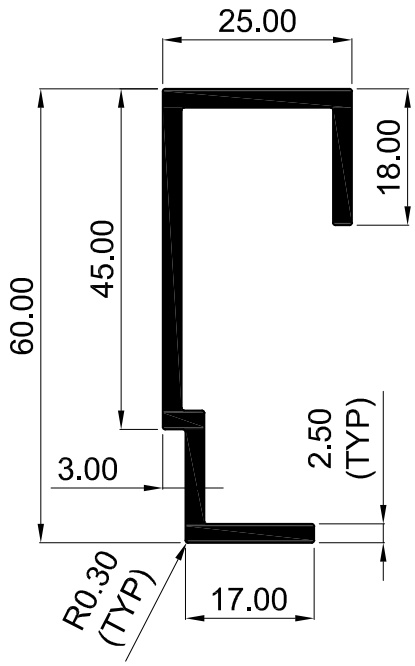

SEC NO	WEIGHT kg/m
K7358	0.79

KMC ALUMINIUM

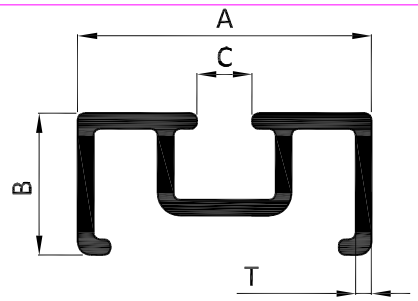

SEC NO	A	B	C	T	WEIGHT kg /mtr.
6407	46.50	10.80	4.20	1.20	0.271
6408	21.50	10.80	4.20	1.20	0.190

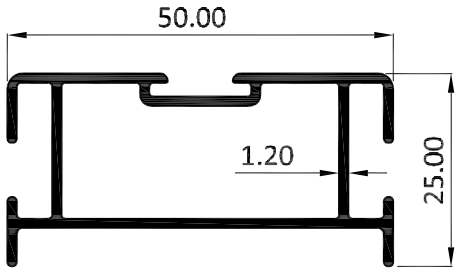

SEC NO	WEIGHT kg /mtr.
6401	0.567

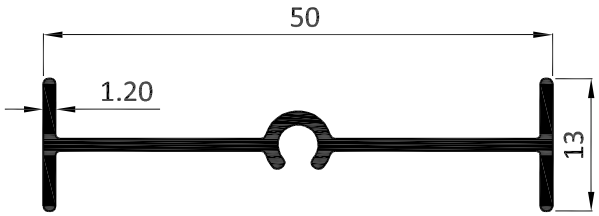

SEC NO	WEIGHT kg /mtr.
6402	0.262

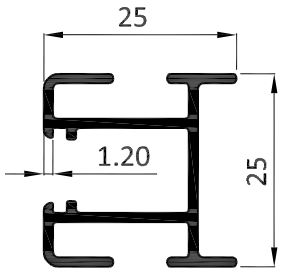

SEC NO	WEIGHT kg /mtr.
6403	0.354

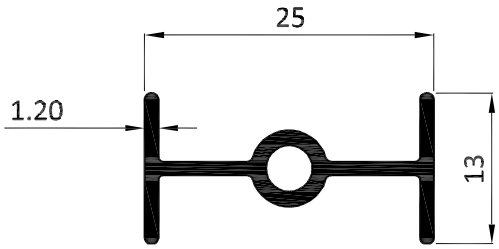

SEC NO	WEIGHT kg /mtr.
6404	0.194

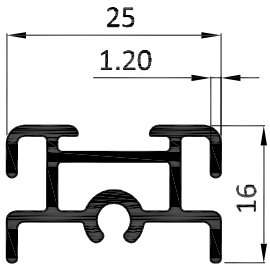

SEC NO	WEIGHT kg /mtr.
6405	0.326

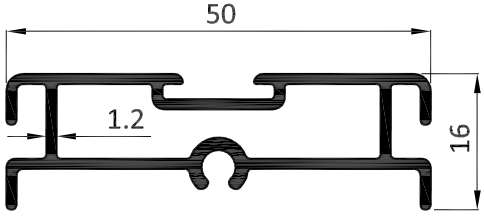

SEC NO	WEIGHT kg /mtr.
6406	0.505

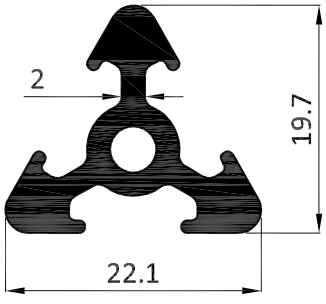

SEC NO	WEIGHT kg /mtr.
6411	0.377

KMC ALUMINIUM

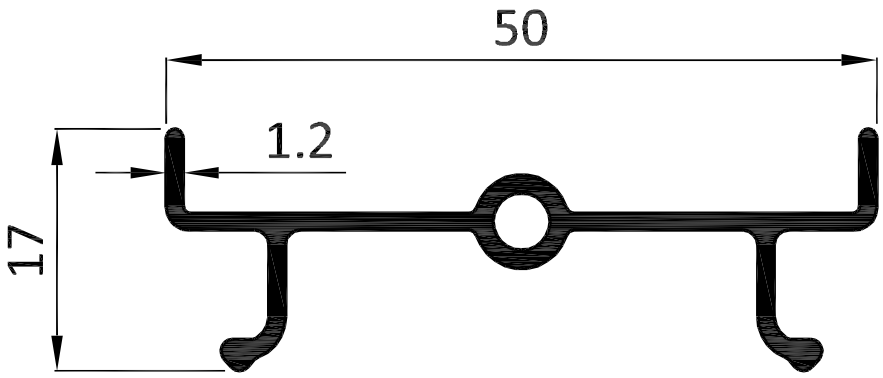

SEC NO	WEIGHT kg /mtr.
6418	0.317

KMC ALUMINIUM

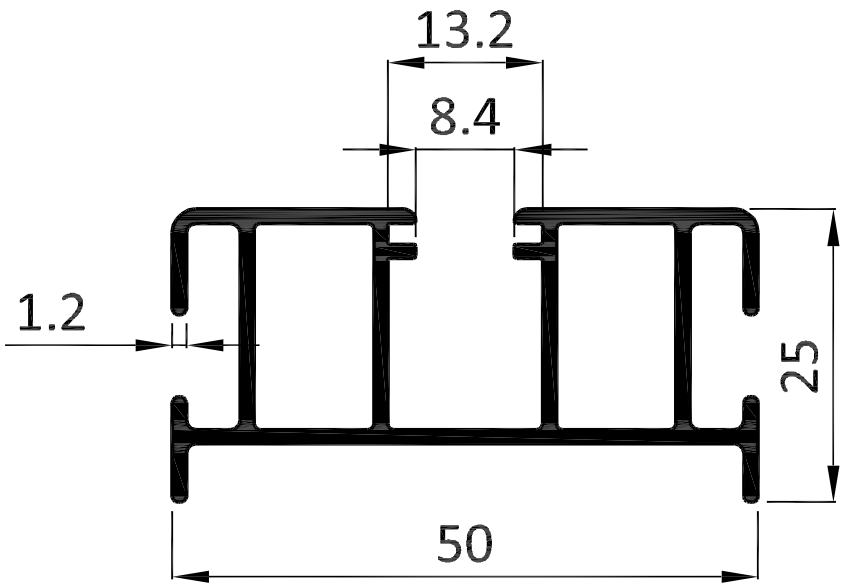

SEC NO	WEIGHT kg /mtr.
6426	0.639

KMC ALUMINIUM

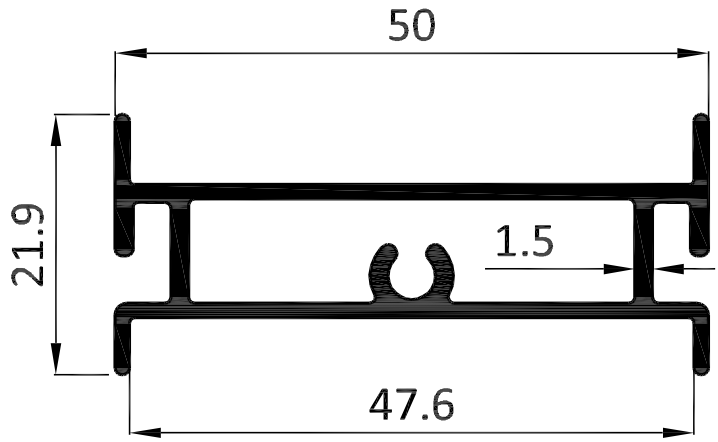

SEC NO	WEIGHT kg /mtr.
8862	0.553

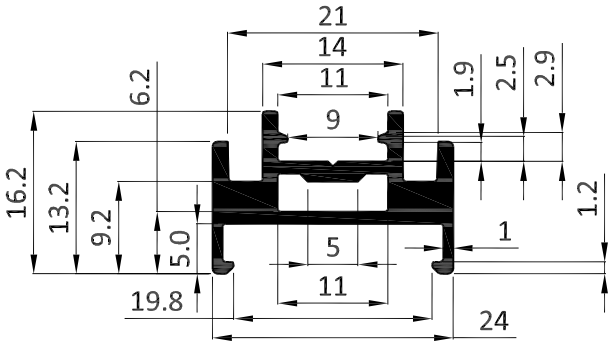

SEC NO	WEIGHT kg /mtr.
8351	0.359

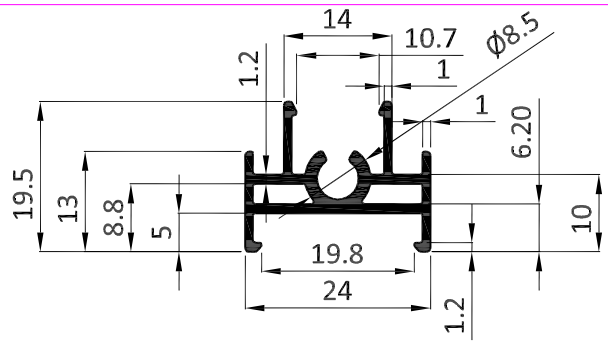

SEC NO	WEIGHT kg /mtr.
8352	0.314

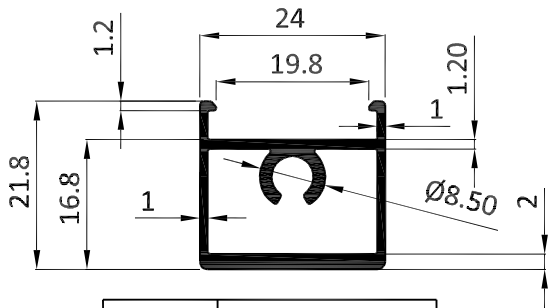

SEC NO	WEIGHT kg /mtr.
8353	0.385

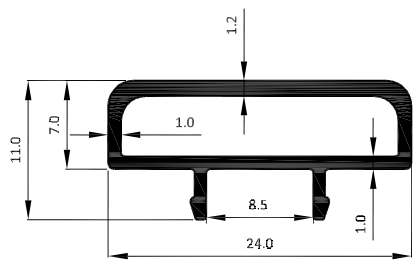

SEC NO	WEIGHT kg /mtr.
8354	0.189

KMC ALUMINIUM

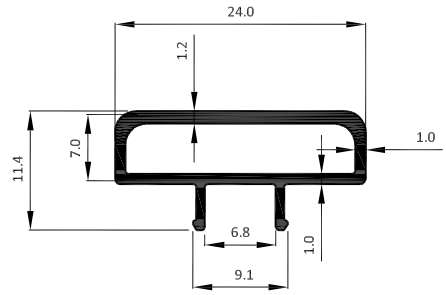

SEC NO	WEIGHT kg /mtr.
8355	0.189

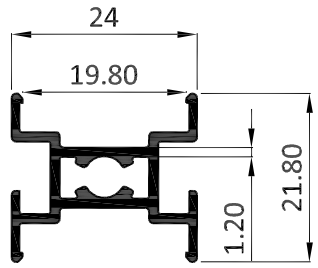

SEC NO	WEIGHT kg /mtr.
8371	0.328

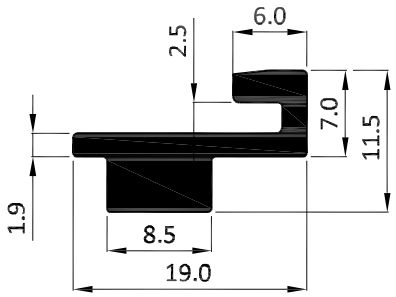

SEC NO	WEIGHT kg /mtr.
8370	0.255

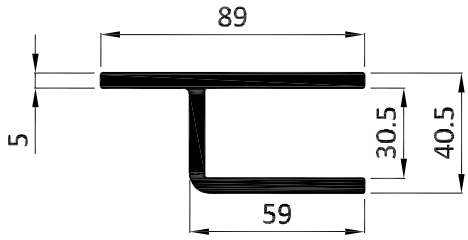

SEC NO	WEIGHT kg /mtr.
8641	2.384

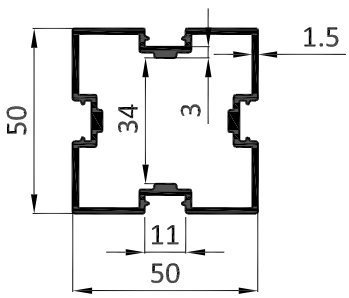

SEC NO	WEIGHT kg /mtr.
8677	1.062

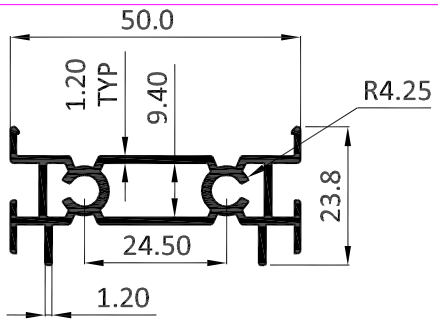

SEC NO	WEIGHT kg /mtr.
8678	0.632

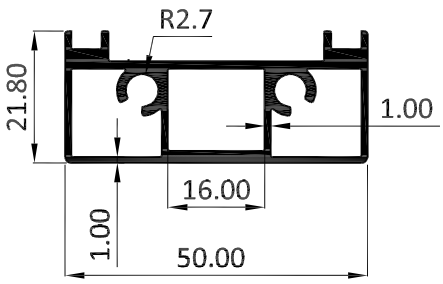

SEC NO	WEIGHT kg /mtr.
8679	0.732

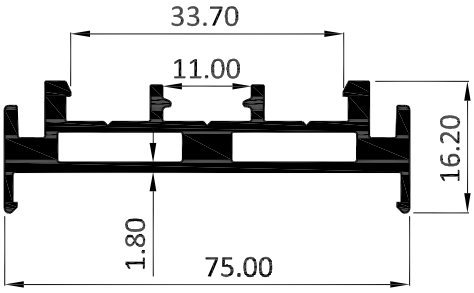

SEC NO	WEIGHT kg /mtr.
8680	0.639

KMC ALUMINIUM

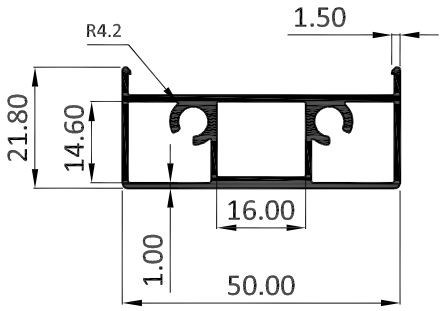

SEC NO	WT/RANGE/12'
8681	2.131 - 2.557

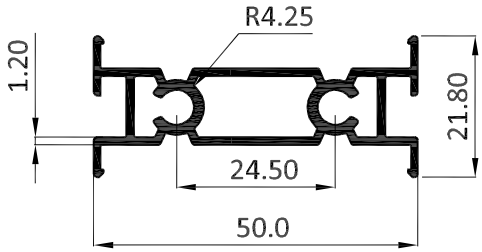

SEC NO	WT/RANGE/12'
8682	1.722 - 2.067

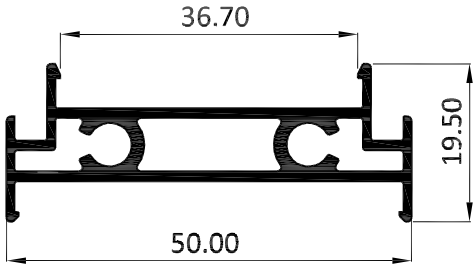

SEC NO	WT/RANGE/12'
8683	1.854 - 2.225

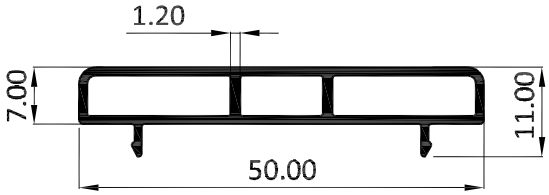

SEC NO	WT/RANGE/12'
8684	1.143 - 1.371

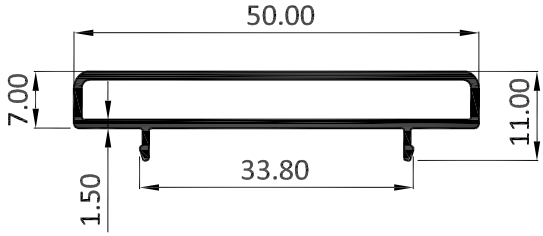

SEC NO	WT/RANGE/12'
8685	1.027 - 1.233

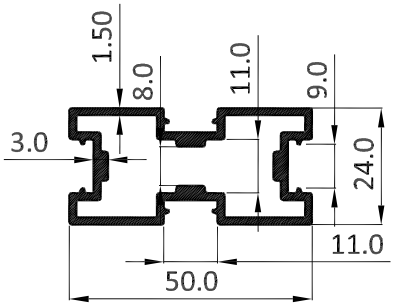

SEC NO	WT/RANGE/12'
8686	2.803 - 3.425

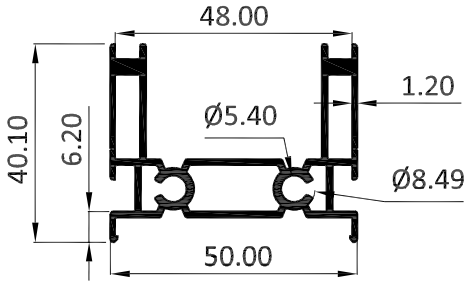

SEC NO	WT/RANGE/12'
8979	3.037 - 3.644

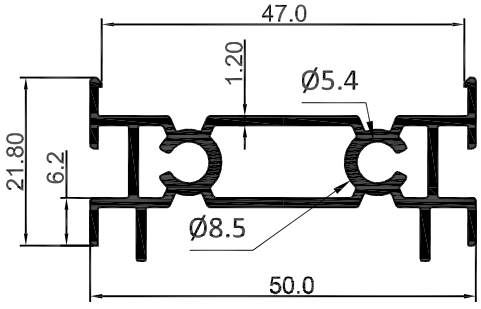

SEC NO	WT/RANGE/12'
8980	2.078 - 2.494

KMC ALUMINIUM

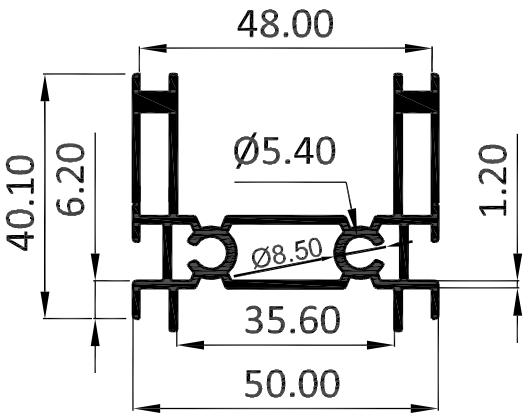

SEC NO	WT/RANGE/12'
8981	3.178 - 3.814

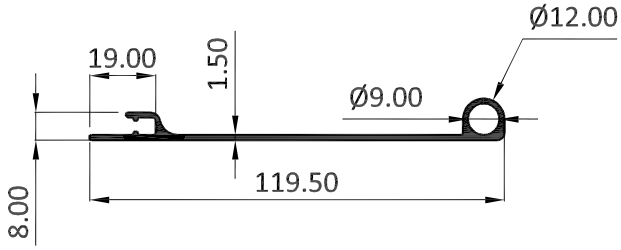

SEC NO	WT/RANGE/12'
16003	2.246 - 2.695

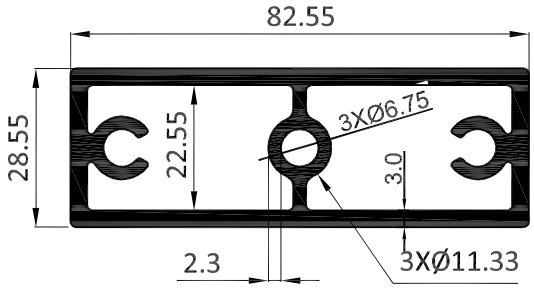

SEC NO	WT/RANGE/12'
8931	7.474 - 8.968

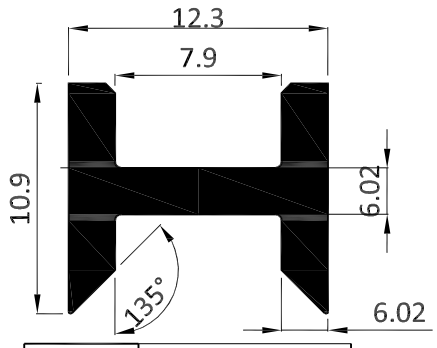

SEC NO	WEIGHT kg /mtr.
K6470	0.165

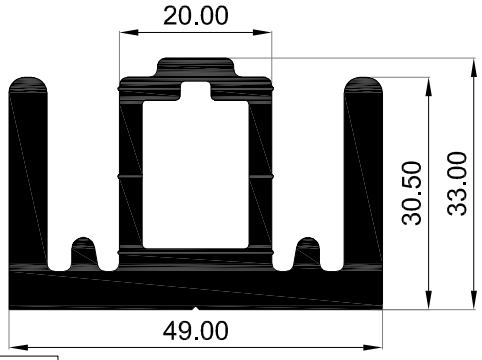

SEC NO	WEIGHT kg/m
K7068	2.218

KMC ALUMINIUM

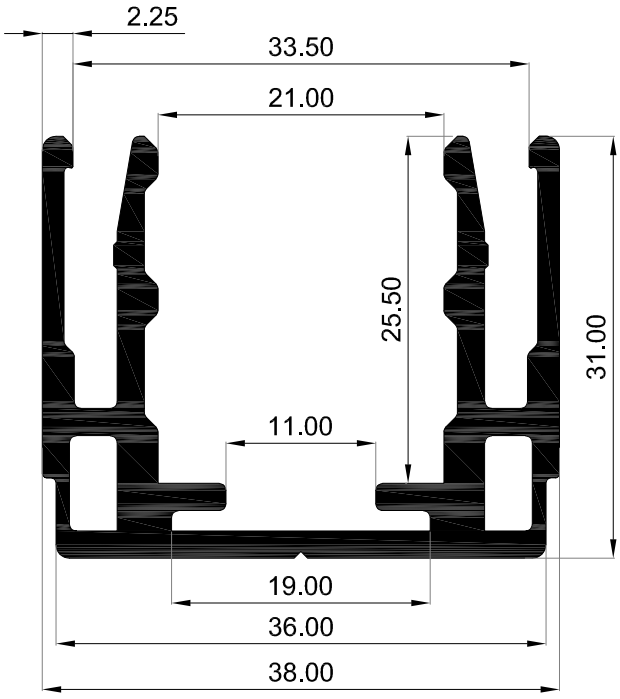

SEC NO	WEIGHT kg/m
K7069	0.947

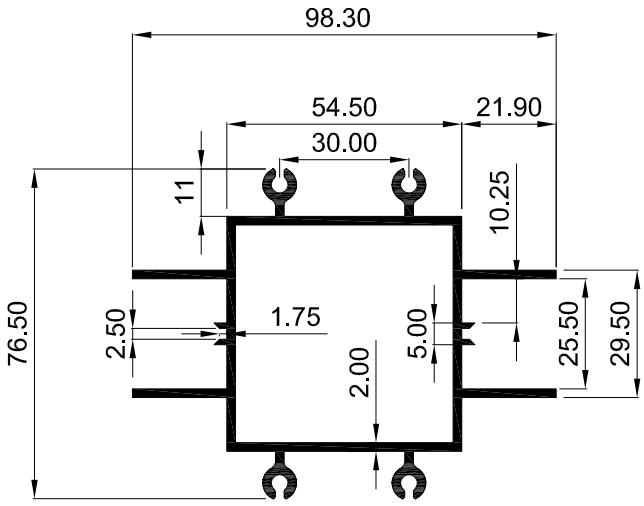

SEC NO	WEIGHT kg/m
K7049	2.104

KMC ALUMINIUM

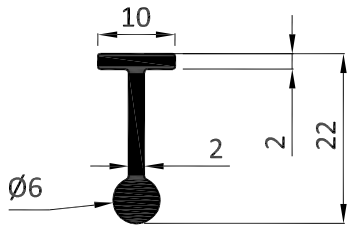

SEC NO	WT/RANGE/12'
16044	0.677 - 0.828

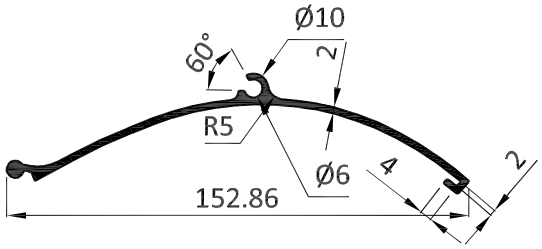

SEC NO	WT/RANGE/12'
16046	3.633 - 4.441

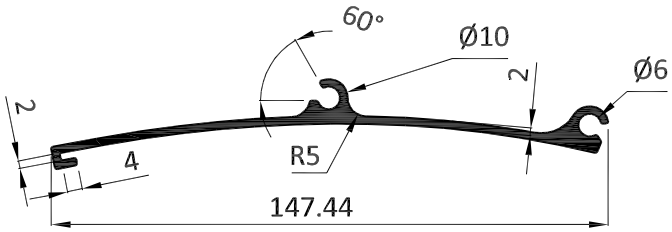

SEC NO	WT/RANGE/12'
16045	3.805 - 4.649

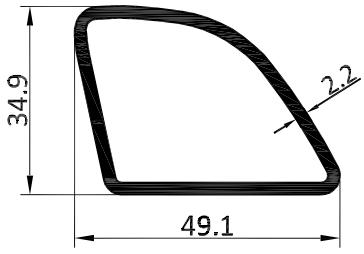

SEC NO	WEIGHT kg /mtr.
8359	0.799

KMC ALUMINIUM

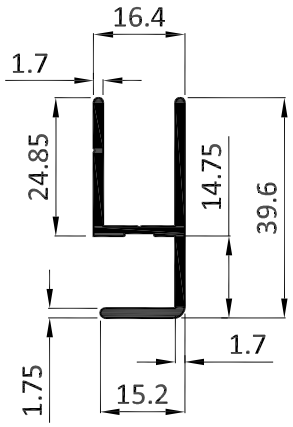

SEC. NO	WEIGHT(kg/m)
K6618	0.410

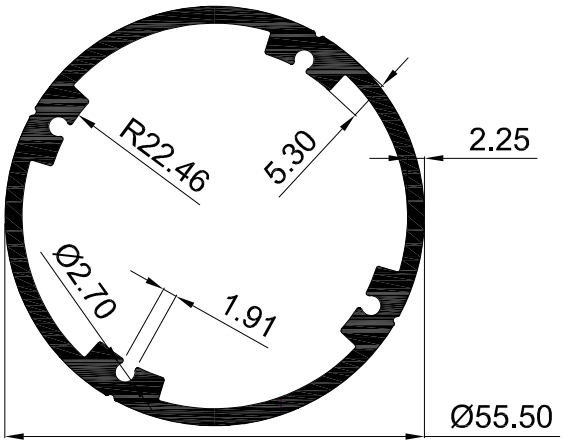

SEC NO	WEIGHT kg/m
K7058	1.316

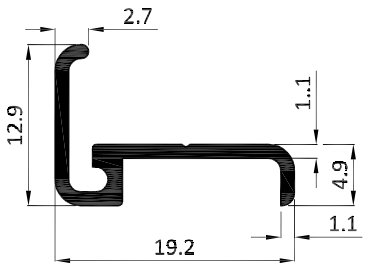

SEC. NO	WEIGHT(kg/m)
K6617	0.120

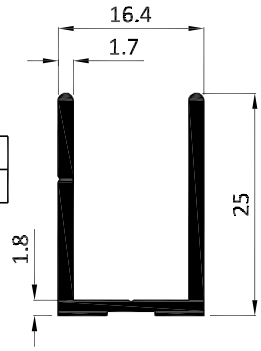

SEC. NO	WEIGHT(kg/m)
K6619	0.283

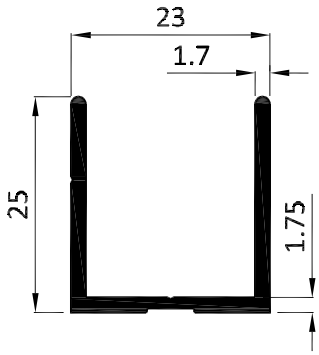

SEC. NO	WEIGHT(kg/m)
K6620	0.314

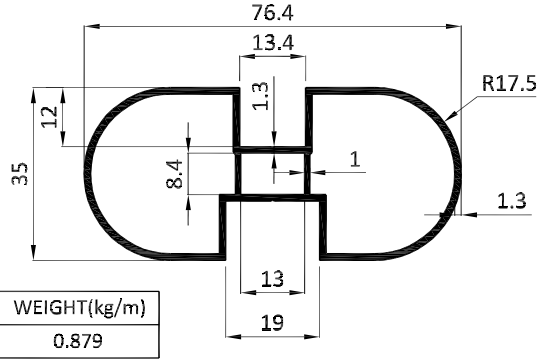

SEC. NO	WEIGHT(kg/m)
K6621	0.879

KMC ALUMINIUM

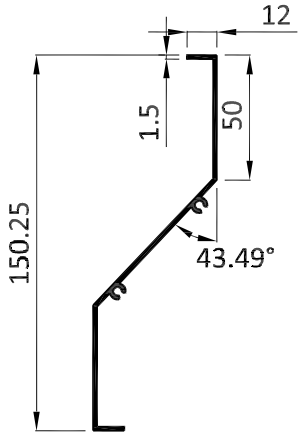

SEC NO	WEIGHT kg /mtr.
K6502	0.85

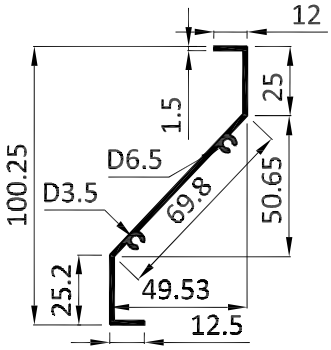

SEC NO	WEIGHT kg /mtr.
K6501	0.65

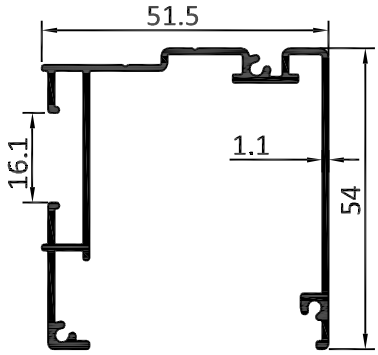

SEC NO	WEIGHT kg /mtr.
7417	0.665

KMC ALUMINIUM

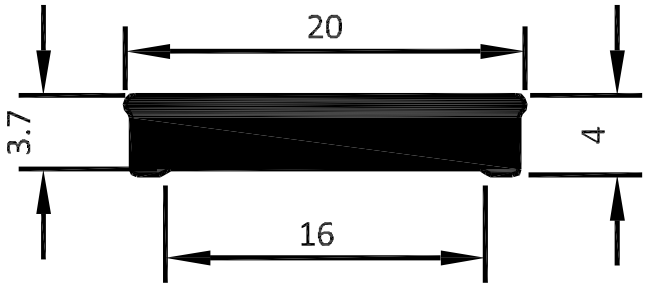

SEC NO	WEIGHT kg /mtr.
7416	0.197

EXCLUSIVE

KMC ALUMINIUM

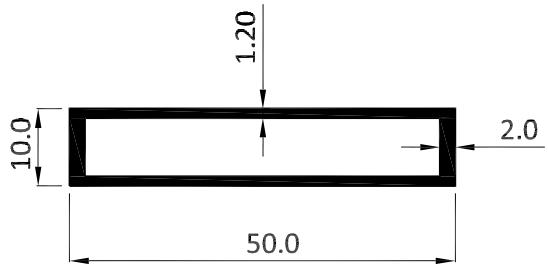

SEC NO	WT/RANGE/12'
8392	1.343 - 1.611

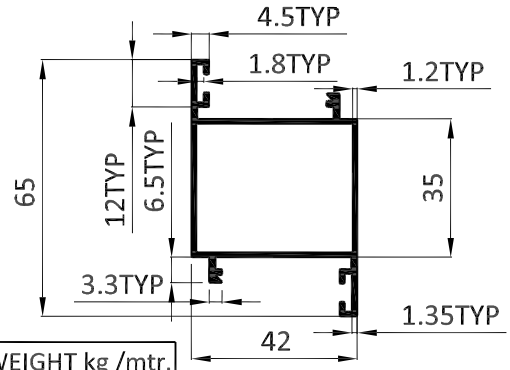

SEC NO	WEIGHT kg /mtr.
16022	0.753

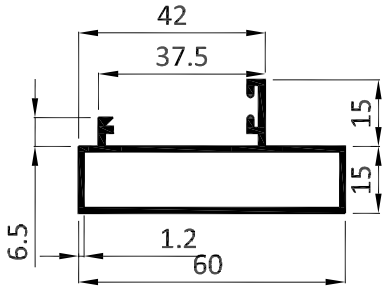

SEC NO	WEIGHT kg /mtr.
K6467	0.604

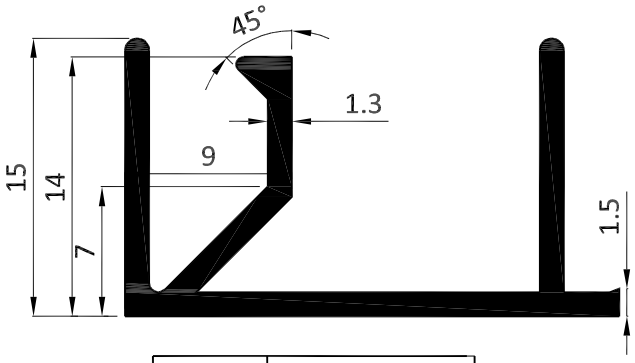

SEC NO	WEIGHT kg /mtr.
K6468	0.249

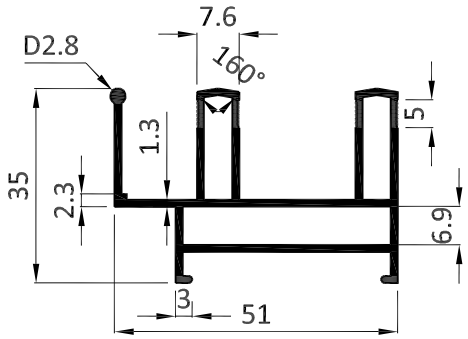

SEC NO	WEIGHT kg /mtr.
K6504	0.771

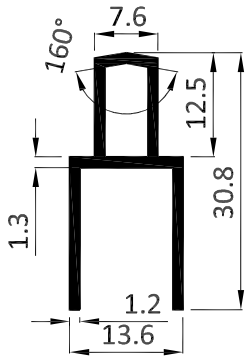

SEC NO	WEIGHT kg /mtr.
K6528	0.253

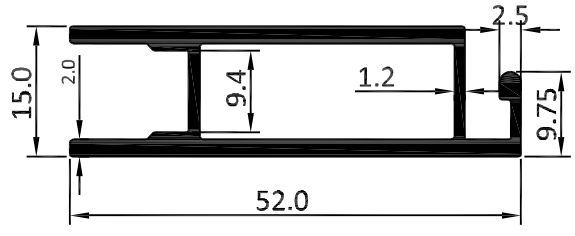

SEC NO	WEIGHT kg /mtr.
8191	0.616

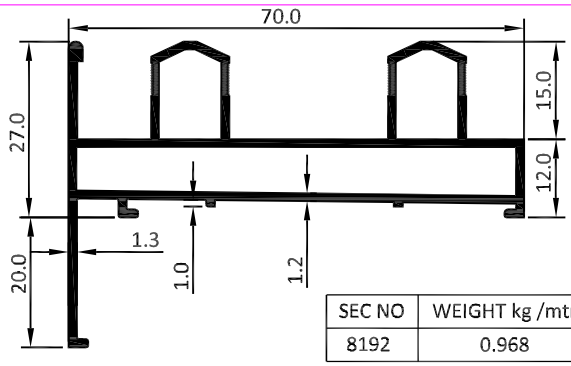

SEC NO	WEIGHT kg /mtr.
8192	0.968

KMC ALUMINIUM

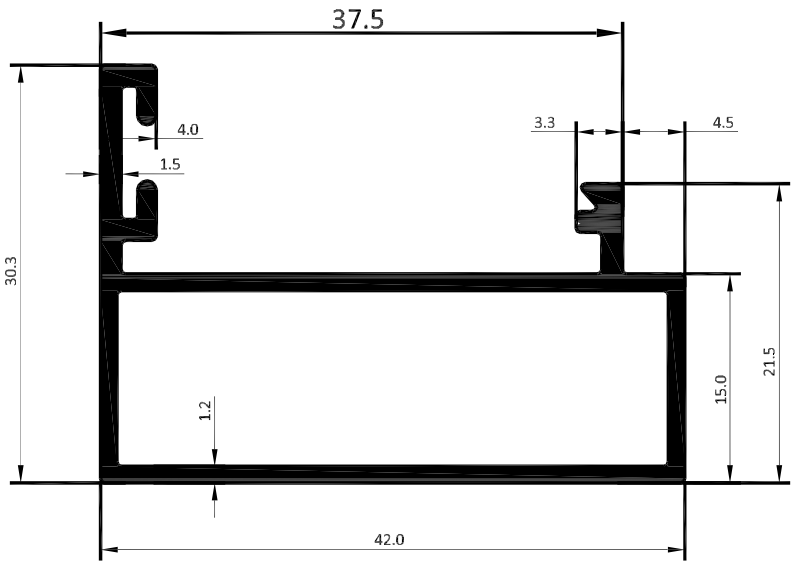

SEC NO	WEIGHT kg /mtr.
8669	0.508

KMC ALUMINIUM

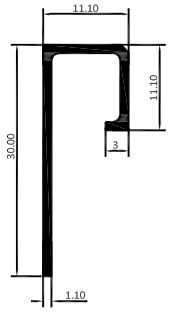

SEC NO	WEIGHT kg /mtr.
8736	0.154

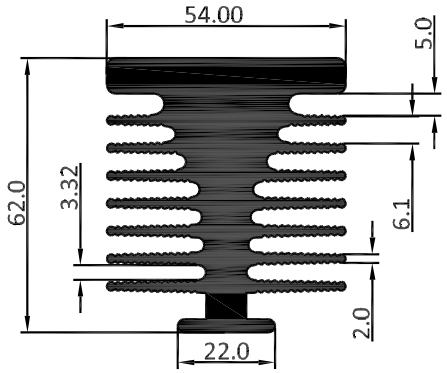

SEC NO	WEIGHT kg /mtr.
6642	4.994

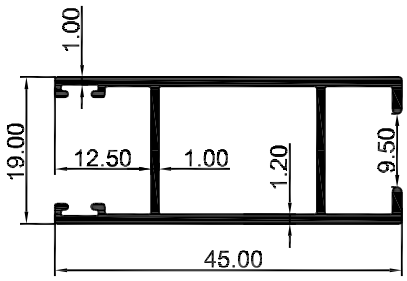

SEC NO	WEIGHT kg /mtr.
8984	0.418

KMC ALUMINIUM

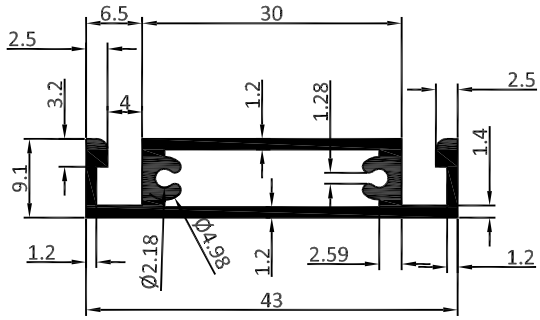

SEC. NO	WEIGHT(kg/m)
K6601	0.427

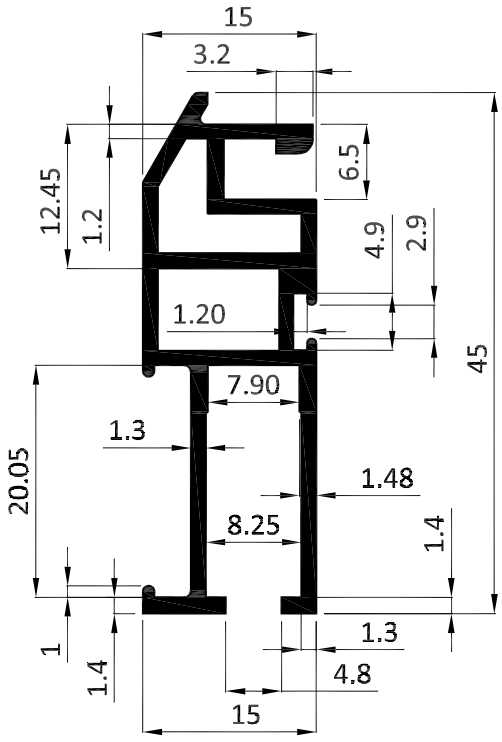

SEC. NO	WEIGHT(kg/m)
K6600	0.521

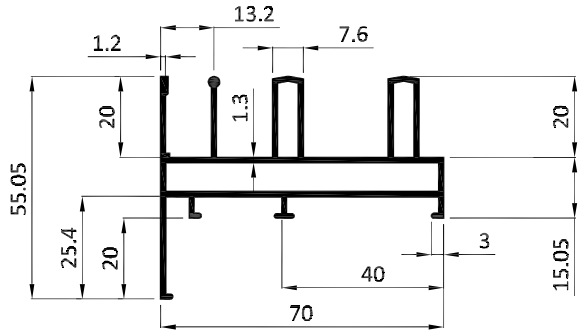

SEC. NO	WEIGHT(kg/m)
K6670	1.143

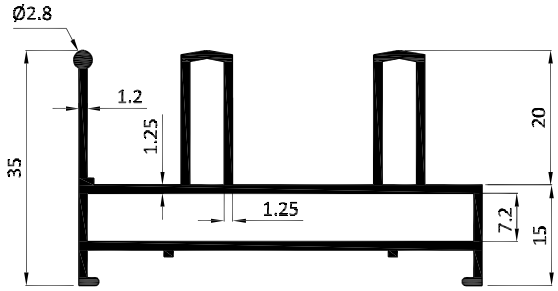

SEC. NO	WEIGHT(kg/m)
K6668	0.882

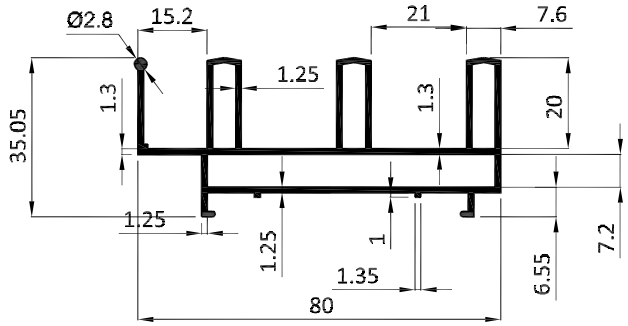

SEC. NO	WEIGHT(kg/m)
K6669	1.125

KMC ALUMINIUM

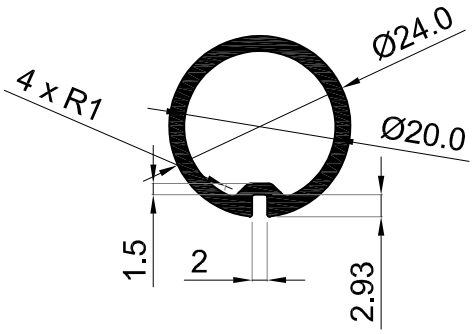

SEC NO	WEIGHT kg/m
K6951	0.392

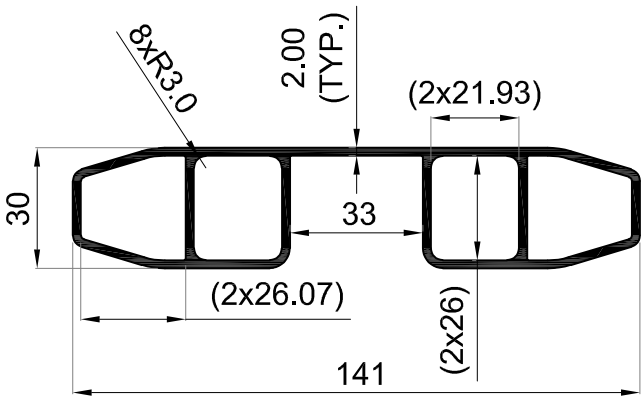

SEC NO	WEIGHT kg/m
K6952	2.255

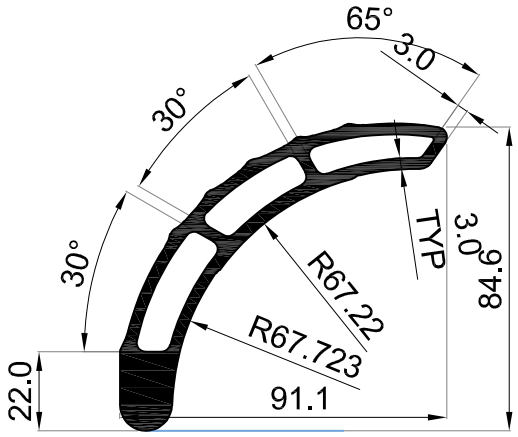

SEC NO	WEIGHT kg/m
K6989	2.946

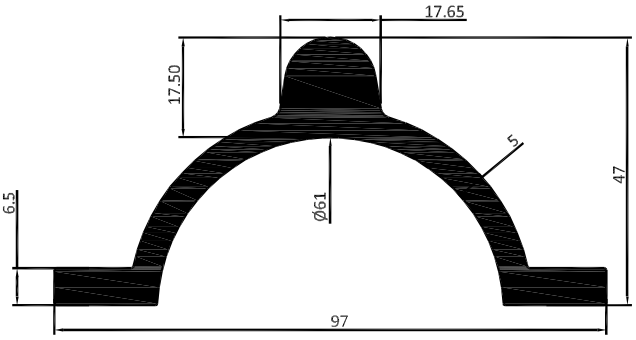

SEC NO	WEIGHT kg /mtr.
8961	2.335

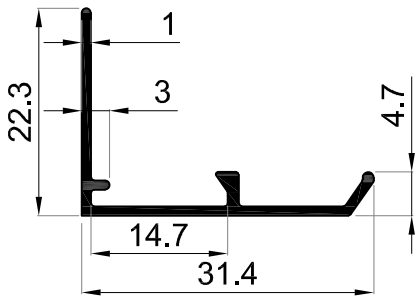

SEC NO	WEIGHT kg/m
K7009	0.170

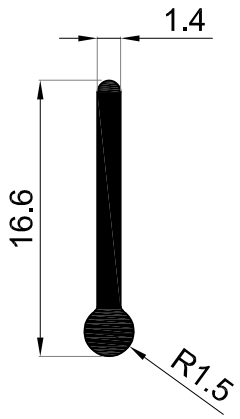

SEC NO	WEIGHT kg/m
K7010	0.070

KMC ALUMINIUM

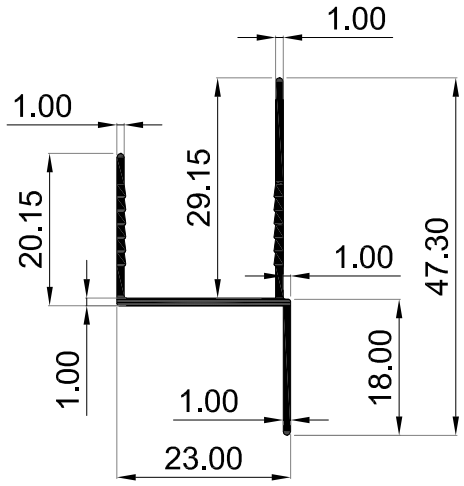

SEC NO	WEIGHT kg/m
K7065	0.247

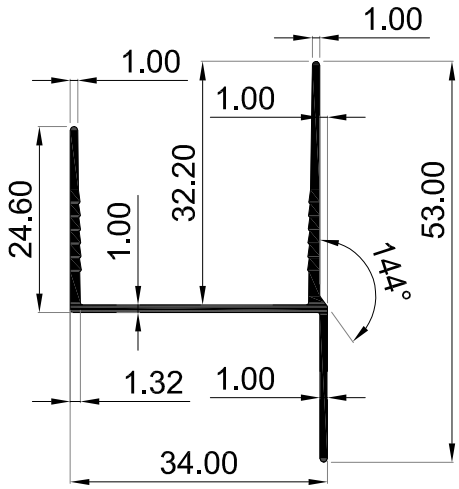

SEC NO	WEIGHT kg/m
K7067	0.337

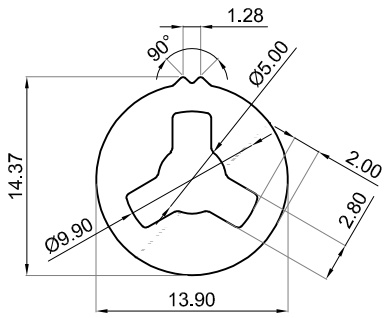

SEC NO	WEIGHT kg/m
K7066	0.305

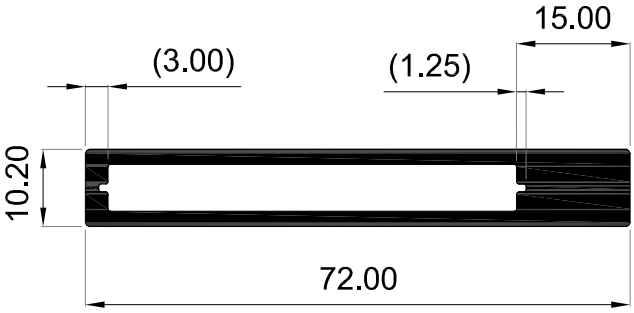

SEC NO	WEIGHT kg/m
K7187	1.086

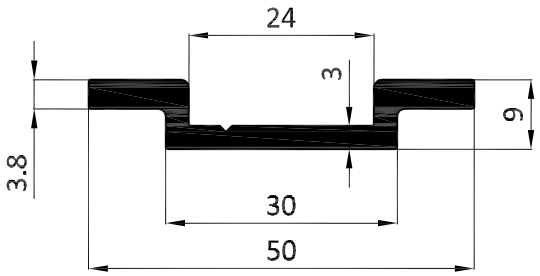

SEC NO	WEIGHT kg /m
K6919	0.551

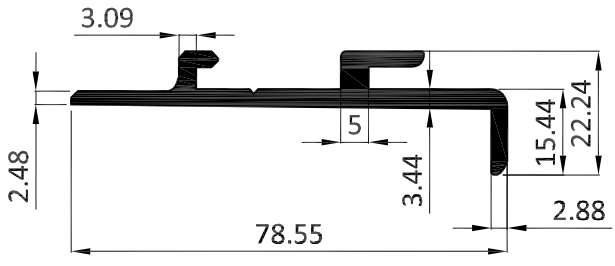

SEC NO	WEIGHT kg /m
K6918	1.000

KMC ALUMINIUM

SEC NO	WEIGHT kg /mtr.
K6368	2.985

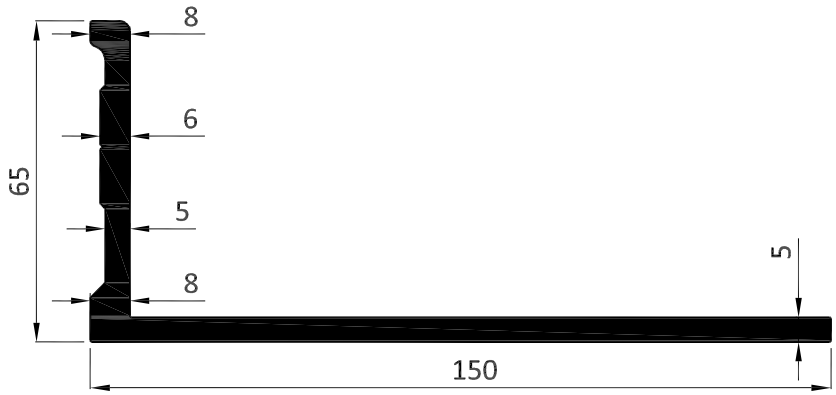

SEC NO	WEIGHT kg /mtr.
K6381	3.946

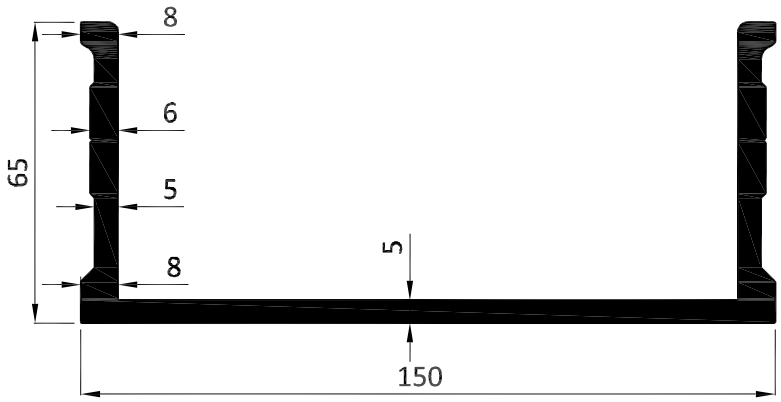

SEC NO	WEIGHT kg /mtr.
K6682	2.846

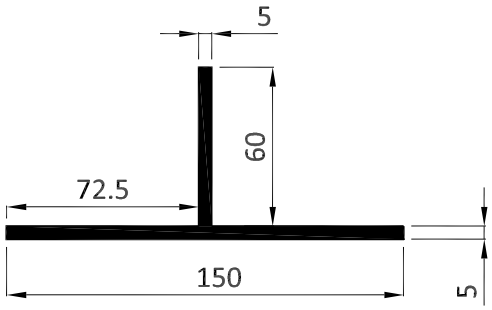

SEC NO	WEIGHT kg /mtr.
K6683	1.973

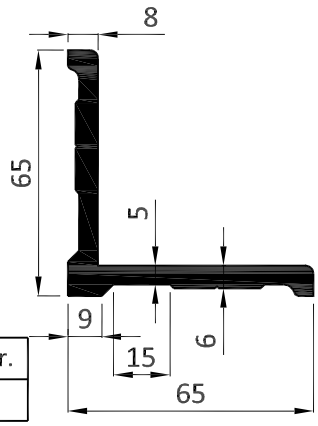

SEC NO	WEIGHT kg /mtr.
K6747	2.906

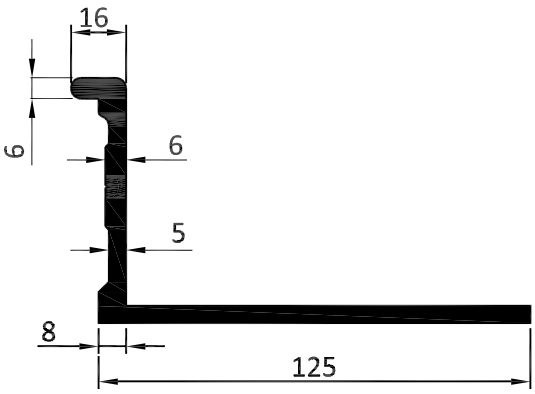

KMC ALUMINIUM

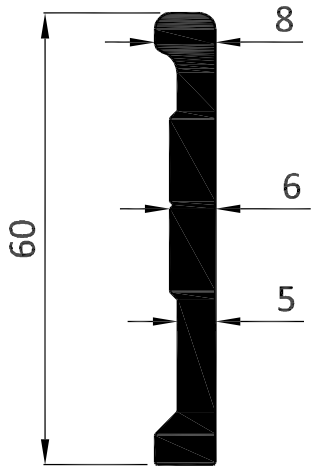

SEC NO	WEIGHT kg /mtr.
K6366	0.958

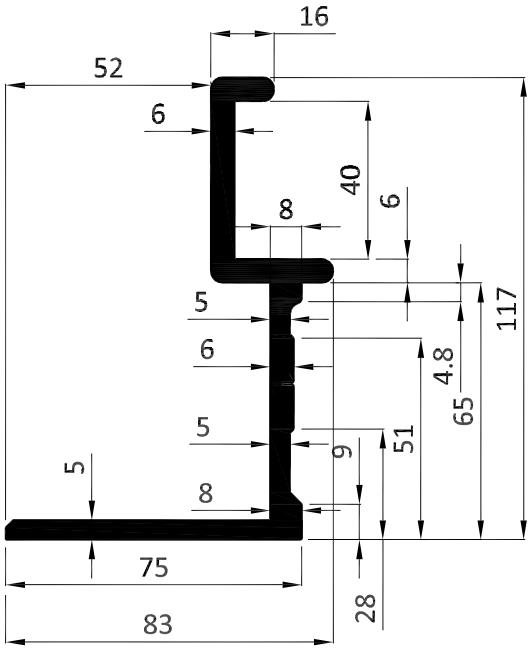

SEC NO	WEIGHT kg /mtr.
K6367	3.367

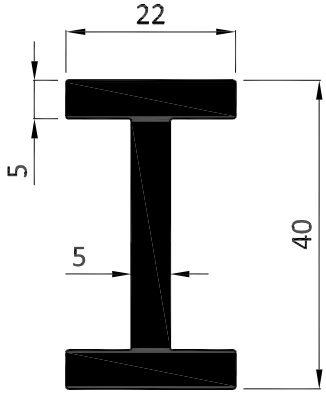

SEC NO	WEIGHT kg /mtr.
K6369	0.998

KMC ALUMINIUM

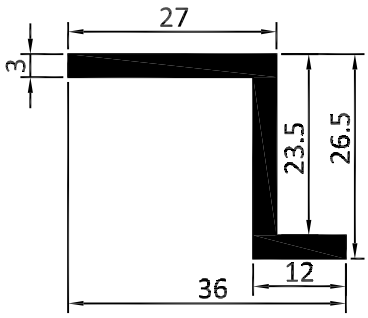

SEC NO	WEIGHT kg /mtr.
8735	0.482

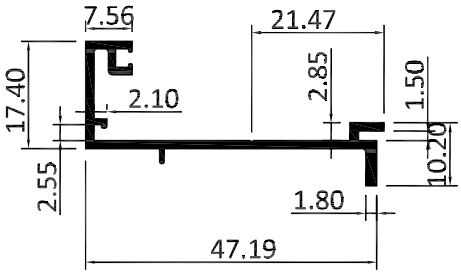

SEC NO	WEIGHT kg /mtr.
6019	0.945

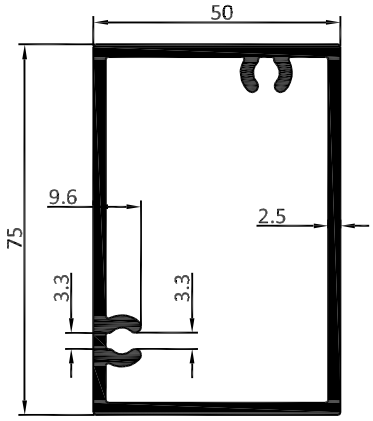

SEC. NO	WEIGHT(kg/m)
8665	1.822

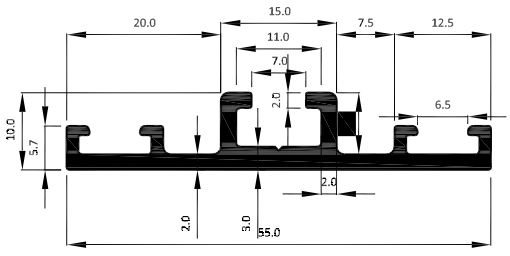

SEC NO	WEIGHT kg /mtr.
8638	0.513

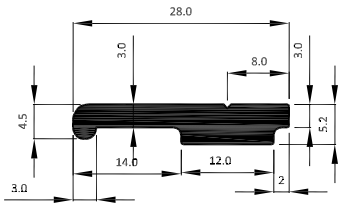

SEC NO	WEIGHT kg /mtr.
8639	0.305

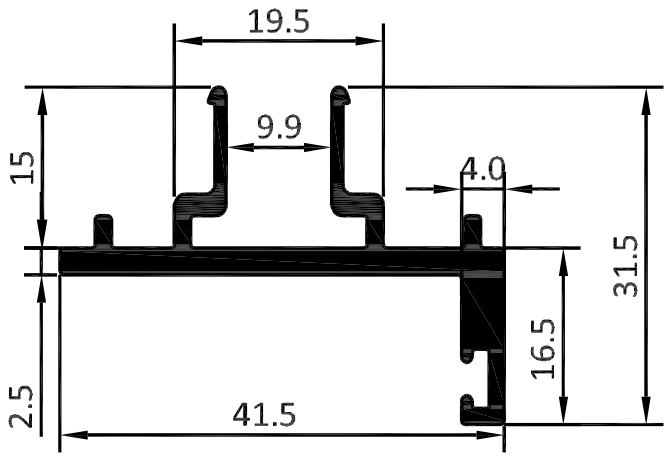

SEC NO	WEIGHT kg /mtr.
7255	0.555

KMC ALUMINIUM

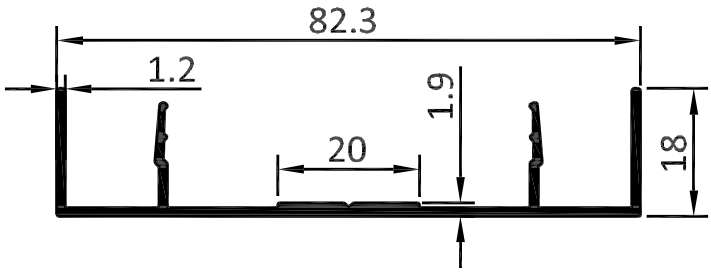

SEC NO	WEIGHT kg /mtr.
7256	0.500

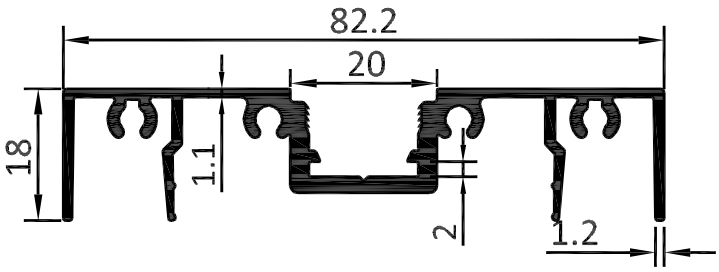

SEC NO	WEIGHT kg /mtr.
7257	0.883

KMC ALUMINIUM

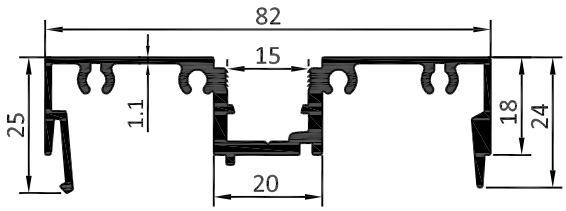

SEC NO	WEIGHT kg /mtr.
7258	0.948

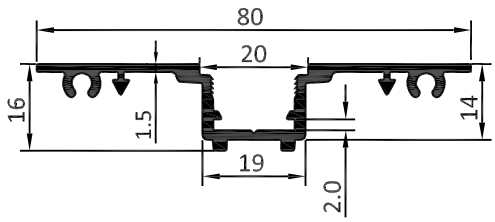

SEC NO	WEIGHT kg /mtr.
7259	0.644

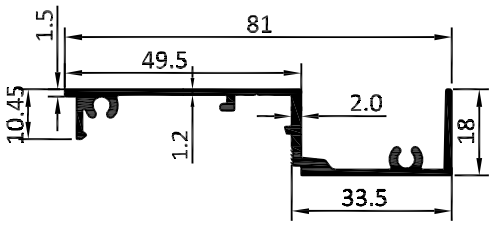

SEC NO	WEIGHT kg /mtr.
7260	0.592

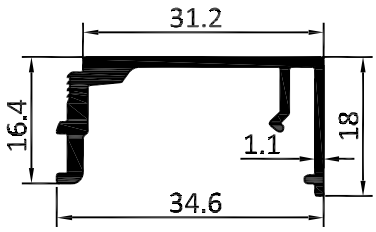

SEC NO	WEIGHT kg /mtr.
7261	0.317

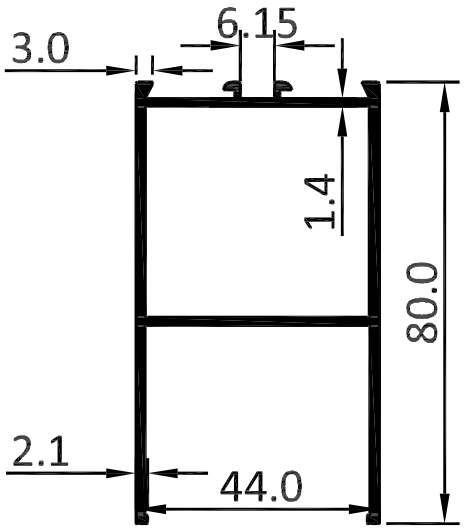

SEC NO	WEIGHT kg /mtr.
7470	1.161

EXCLUSIVE

KMC ALUMINIUM

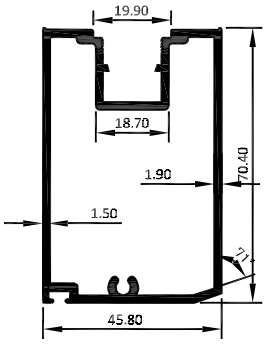

SEC NO	WEIGHT kg /mtr.
8199	1.425

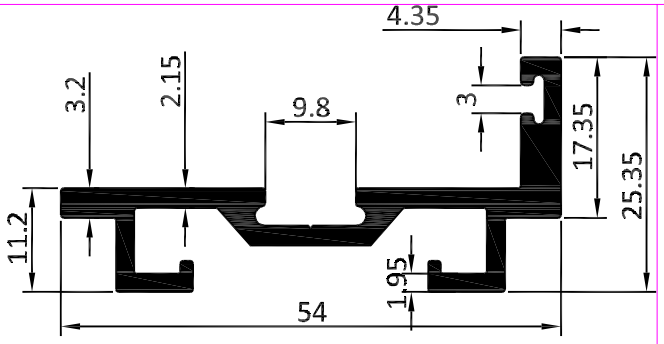

SEC NO	WEIGHT kg /mtr.
7471	0.721

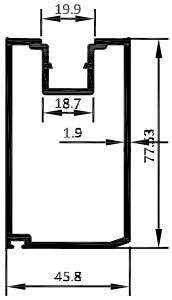

SEC NO	WEIGHT kg /mtr.
8925	1.448

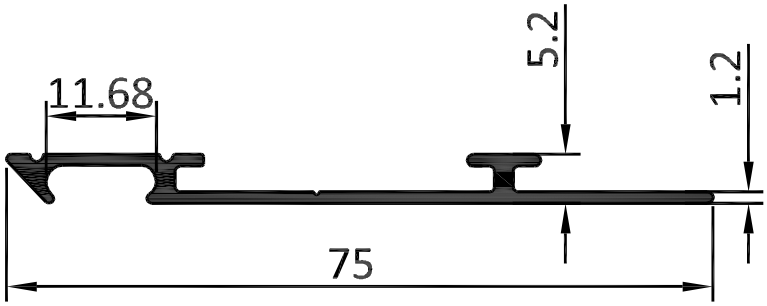

SEC NO	WEIGHT kg /mtr.
7179	0.339

KMC ALUMINIUM

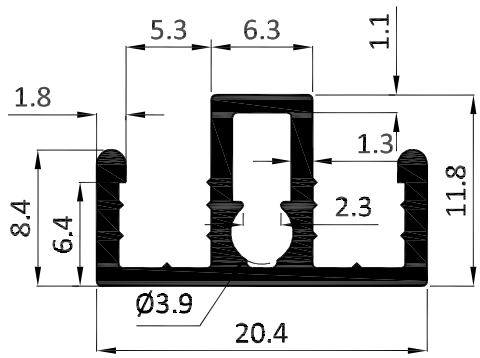

SEC NO	WEIGHT kg /mtr.
K6569	0.212

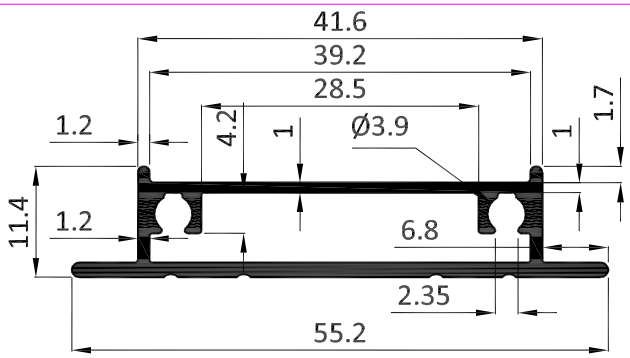

SEC NO	WEIGHT kg /mtr.
K6570	0.442

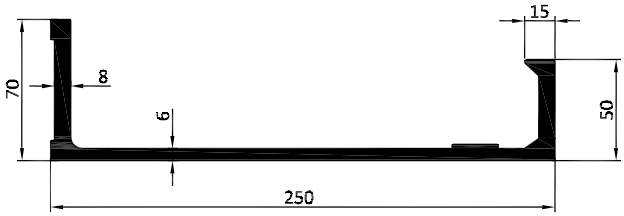

SEC NO	WEIGHT kg /mtr.
6607	6.738

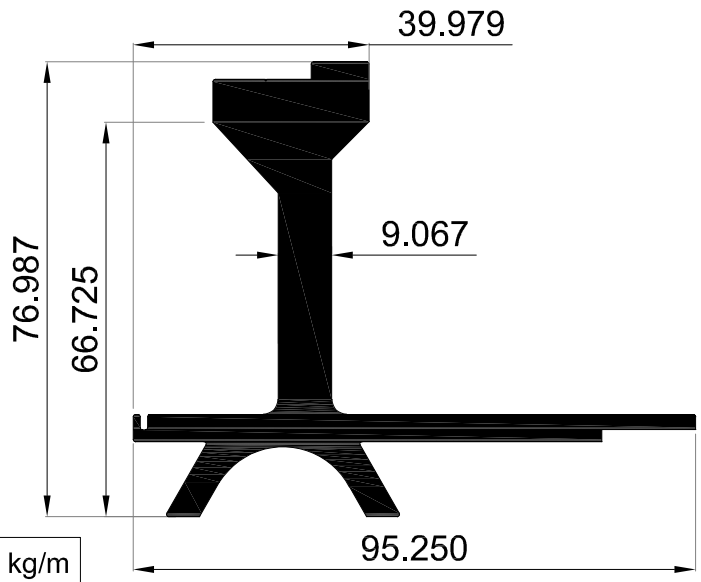

SEC NO	WEIGHT kg/m
K7060	3.663

KMC ALUMINIUM

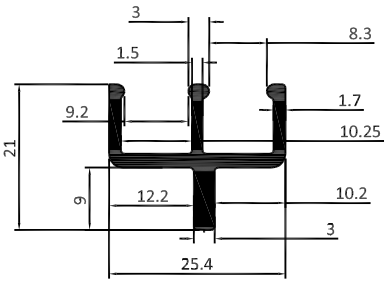

SEC NO	WEIGHT kg /mtr.
8886	0.350

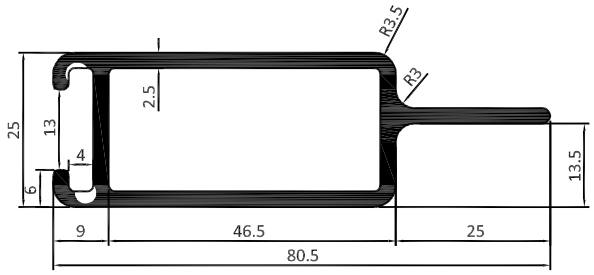

SEC NO	WEIGHT kg /mtr.
16059	1.217

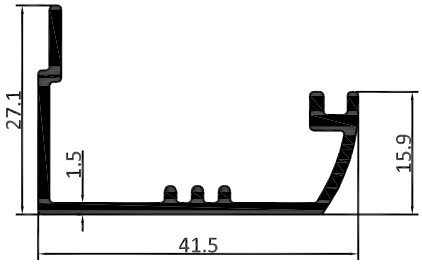

SEC NO	WEIGHT kg /mtr.
8782	0.386

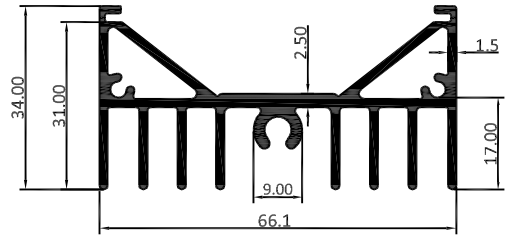

SEC NO	WEIGHT kg /mtr.
6643	1.332

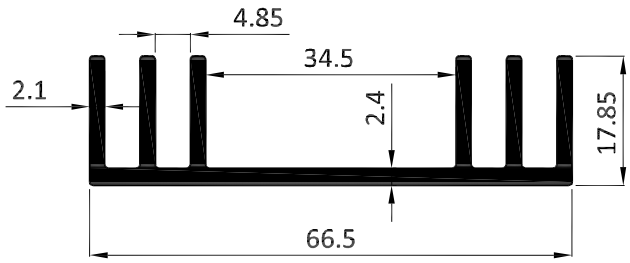

SEC NO	WEIGHT kg /mtr.
8602	0.955

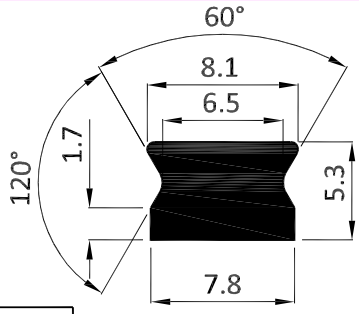

SEC NO	WEIGHT kg /mtr.
K6599	0.106

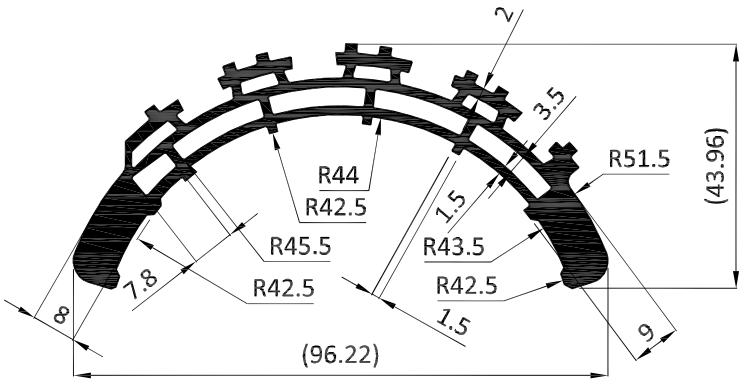

SEC NO	WEIGHT kg /mtr.
2021 - 2022 - 1204	2.103

KMC ALUMINIUM

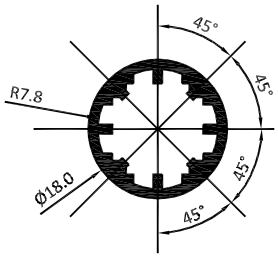

SEC NO	WEIGHT kg /mtr.
8896	0.258

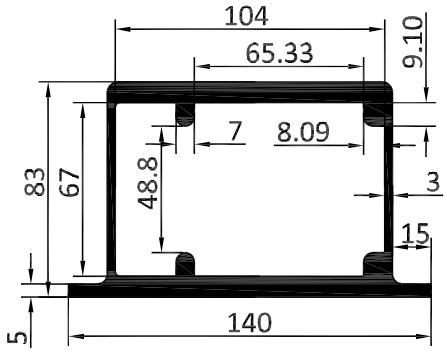

SEC NO	WEIGHT kg /m
8934	6.946

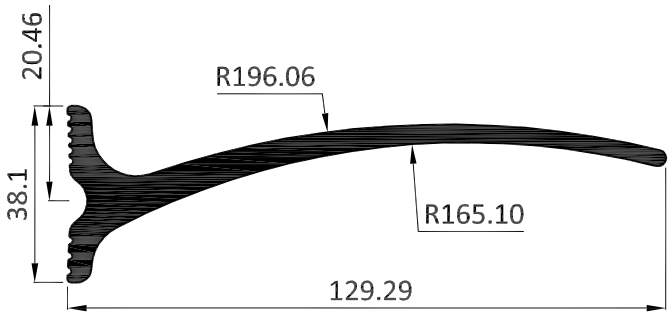

SEC NO	WEIGHT kg /mtr.
K6587	2.259

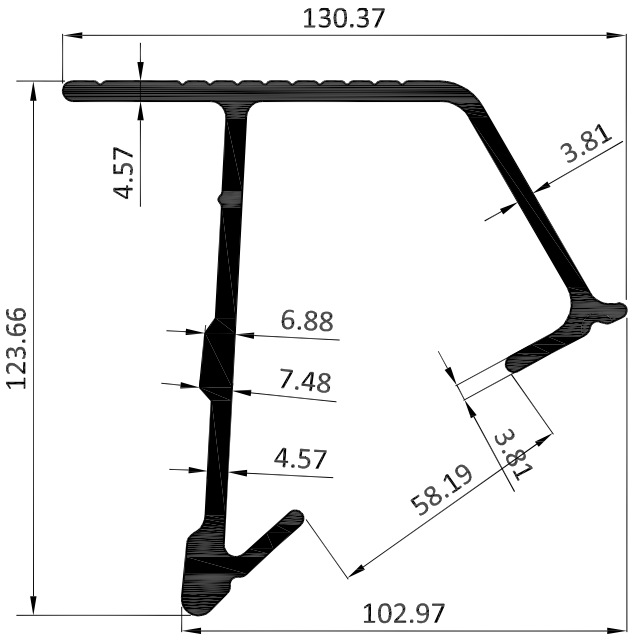

SEC NO	WEIGHT kg /mtr.
K6586	4.137

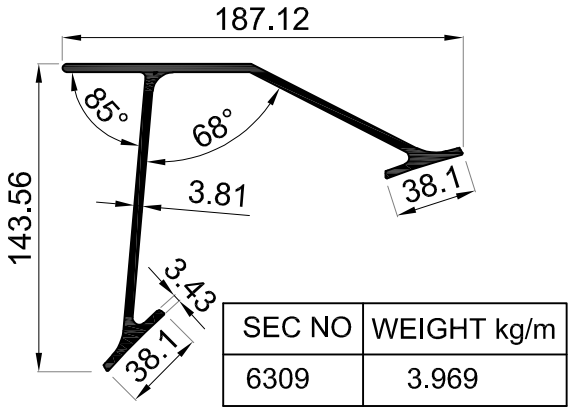

SEC NO	WEIGHT kg/m
6309	3.969

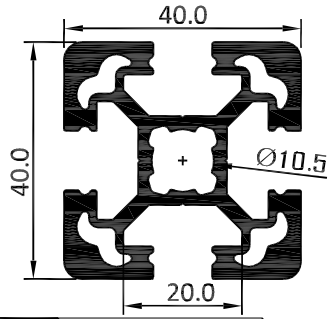

SEC NO	WEIGHT kg /mtr.
7404	1.658

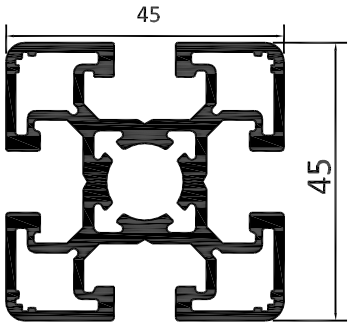

SEC NO	WEIGHT kg /mtr.
6589	1.696

KMC ALUMINIUM

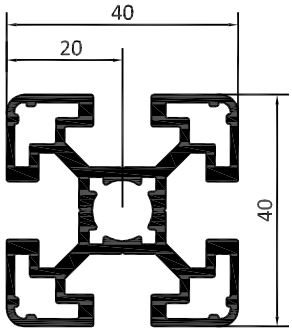

SEC NO	WEIGHT kg /mtr.
6590	1.327

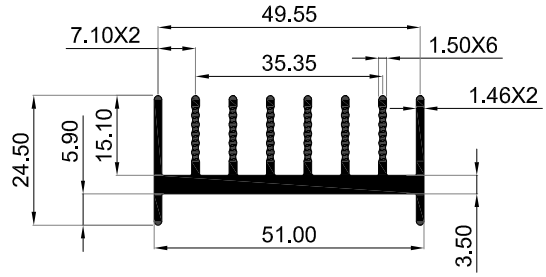

SEC NO	WEIGHT kg/m
K7050	0.986

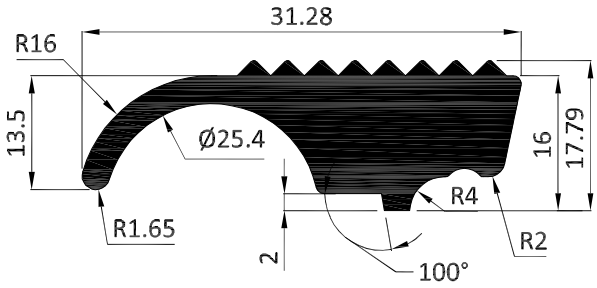

SEC NO	WEIGHT kg /mtr.
K6567	1.292

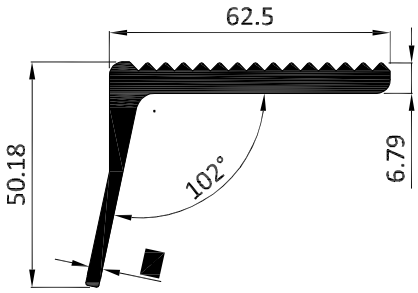

SEC NO	WEIGHT kg /mtr.
K6565	1.465

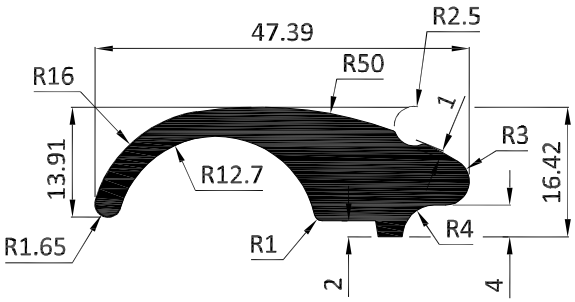

SEC NO	WEIGHT kg /mtr.
K6566	0.936

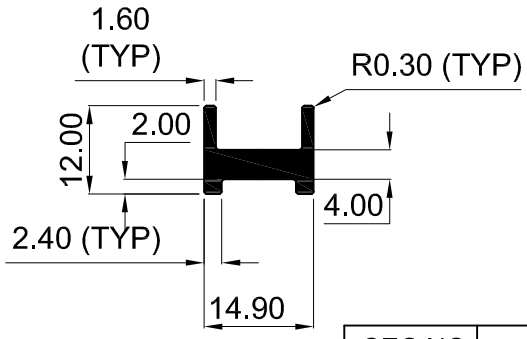

SEC NO	WEIGHT kg/m
K7687	0.238

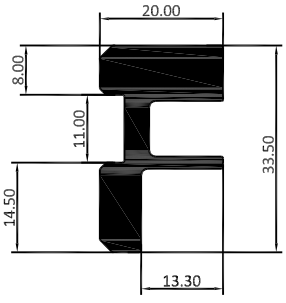

SEC NO	WEIGHT kg /mtr.
8717	0.902

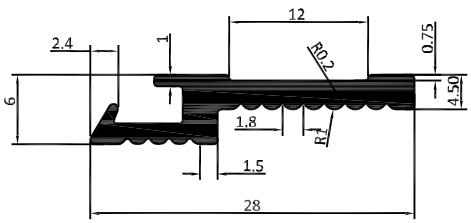

SEC NO	WEIGHT kg /mtr.
16012	0.207

KMC ALUMINIUM

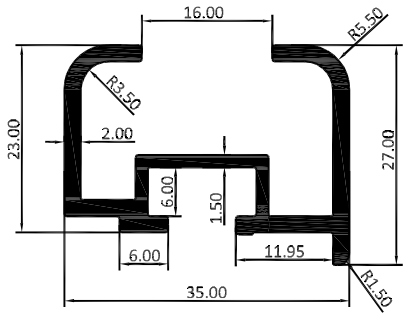

SEC NO	WEIGHT kg /mtr.
16013	0.567

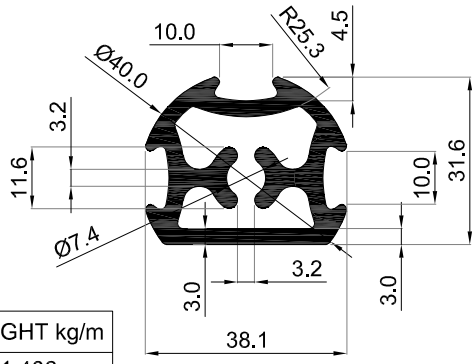

SEC NO	WEIGHT kg/m
K7134	1.406

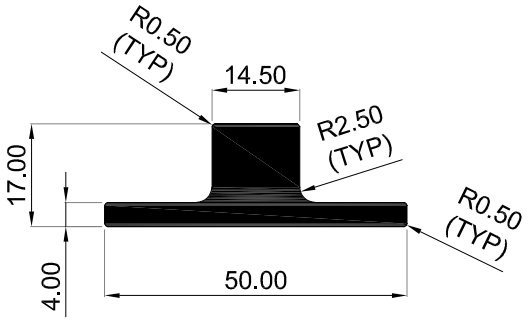

SEC NO	WEIGHT kg/m
K7105	1.071

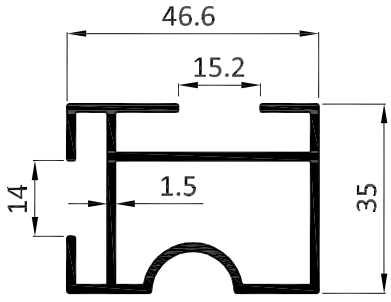

SEC NO	WEIGHT (kg/m)
K6770	0.831

KMC ALUMINIUM

COMMON PROFILES - 45

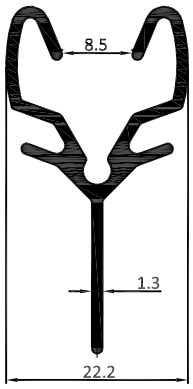

SEC NO	WEIGHT kg /mtr.
8600	0.379

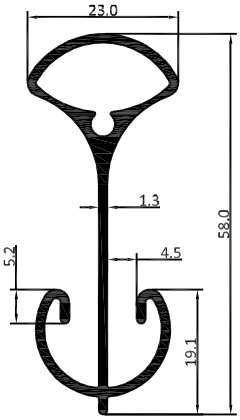

SEC NO	WEIGHT kg /mtr.
8601	0.548

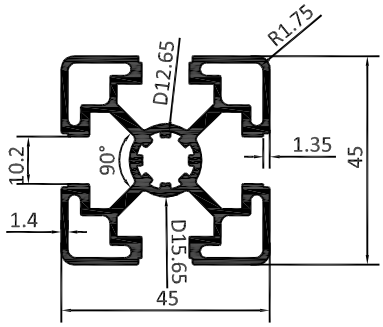

SEC NO	WEIGHT kg /mtr.
6970	1.494

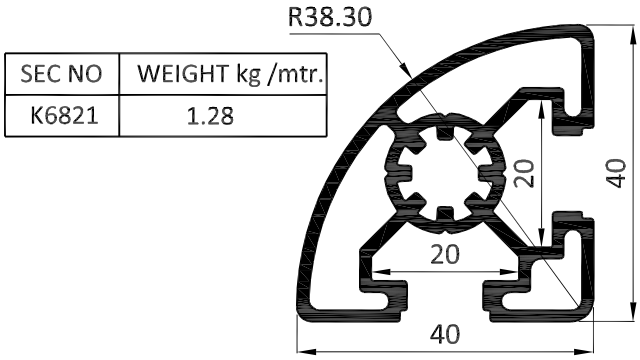

SEC NO	WEIGHT kg /mtr.
K6821	1.28

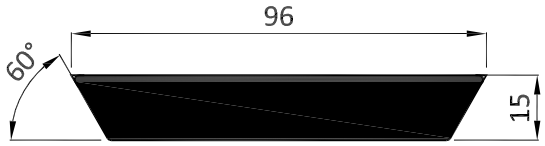

SEC NO	WEIGHT kg /mtr.
K6736	3.533

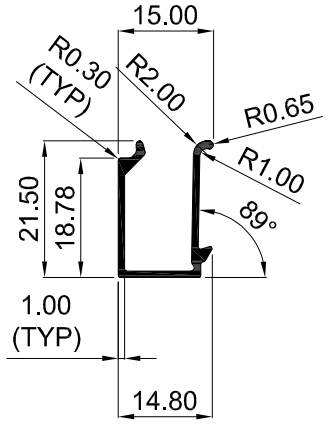

SEC NO	WEIGHT kg/m
K7209	0.175

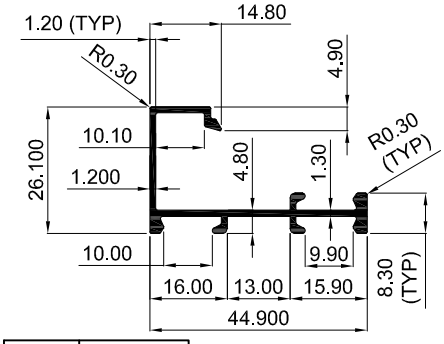

SEC NO	WEIGHT kg/m
K7208	0.414

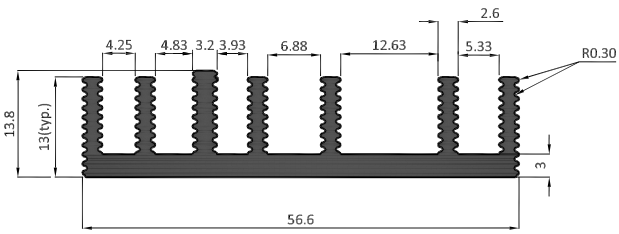

SEC NO	WEIGHT kg /mtr.
K6964	0.860

ALL DIMENSIONS ARE IN MM

KMC ALUMINIUM

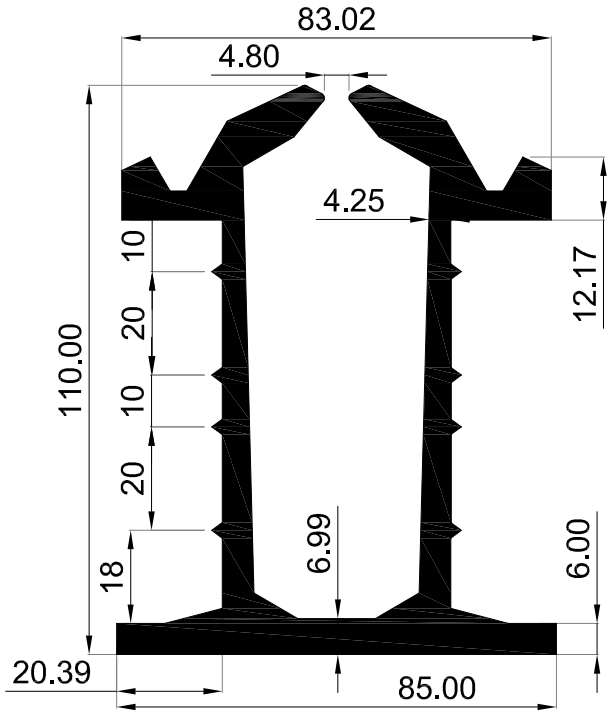

SEC NO	WEIGHT kg/m
K7085	6.172

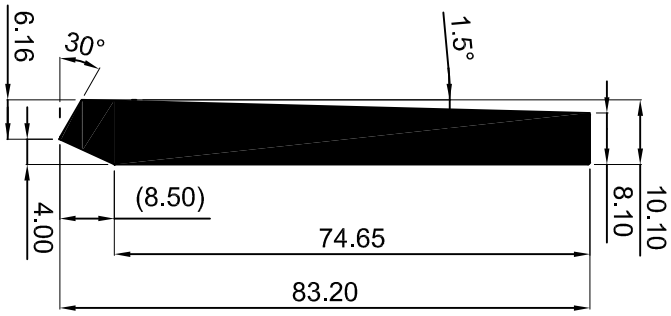

SEC NO	WEIGHT kg/m
K7123	2.009

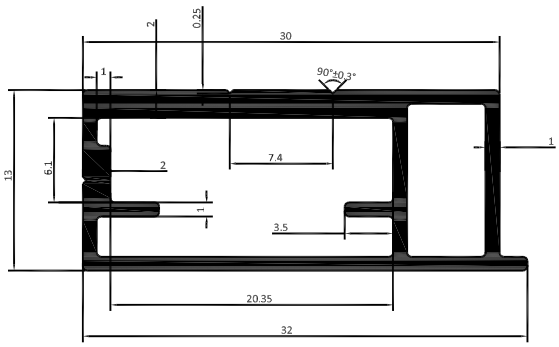

SEC NO	WEIGHT kg /mtr.
K6431	0.349

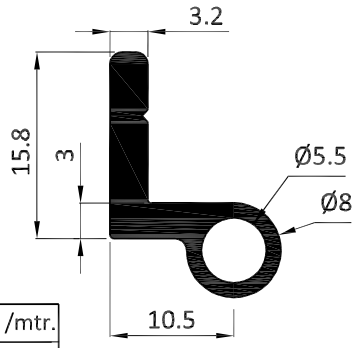

SEC NO	WEIGHT kg /mtr.
K6464	0.244

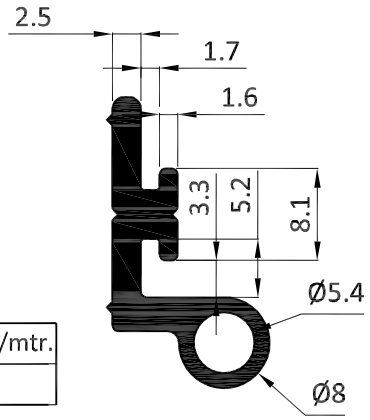

SEC NO	WEIGHT kg /mtr.
K6465	0.305

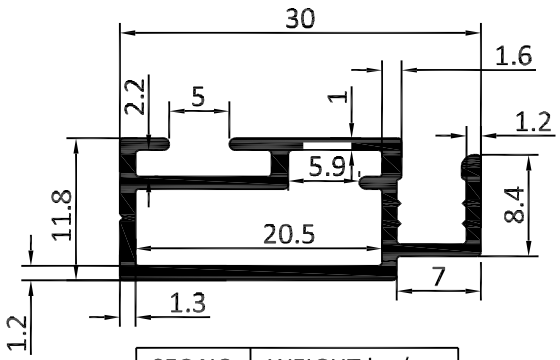

SEC NO	WEIGHT kg /mtr.
8971	0.284

KMC ALUMINIUM

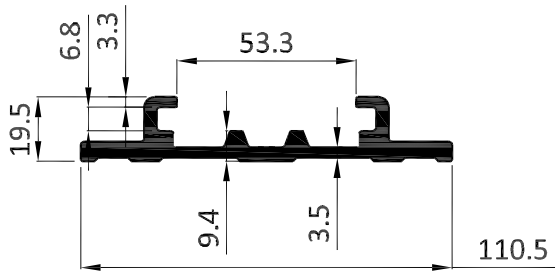

SEC NO	WEIGHT kg /mtr.
16039	2.034

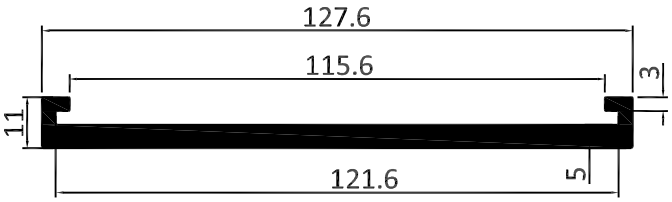

SEC NO	WEIGHT kg /mtr.
16037	1.686

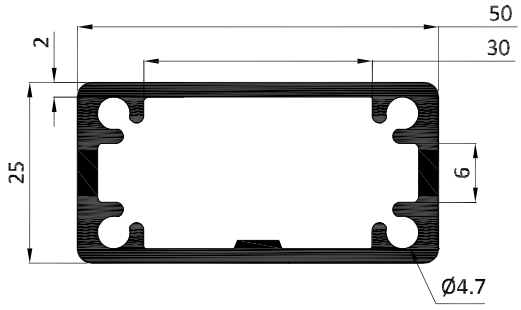

SEC NO	WEIGHT kg /mtr.
16038	1.130

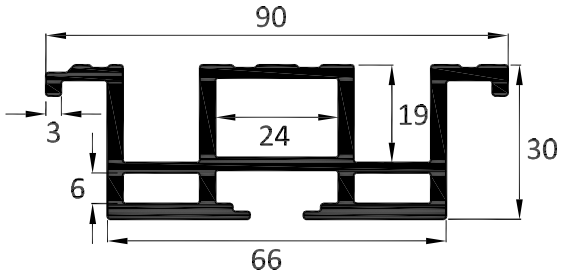

SEC NO	WEIGHT kg /mtr.
6338	1.986

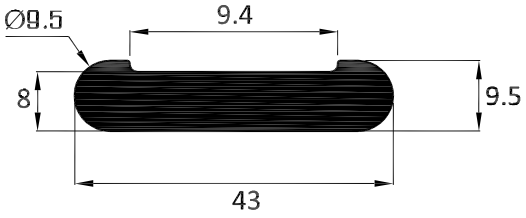

SEC NO	WEIGHT kg /mtr.
6339	0.937

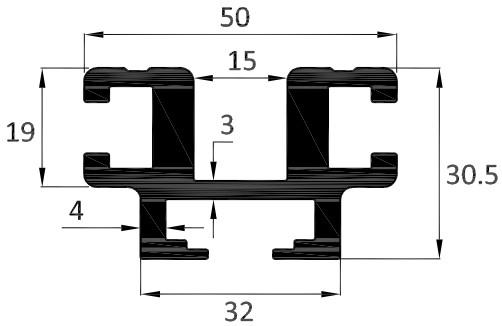

SEC NO	WEIGHT kg /mtr.
6341	1.986

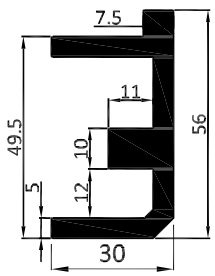

SEC NO	WEIGHT kg /mtr.
8360	1.743

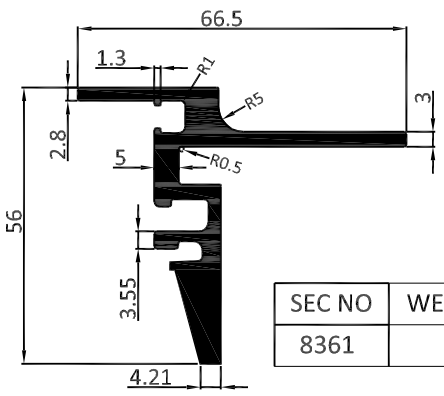

SEC NO	WEIGHT kg /mtr.
8361	1.559

KMC ALUMINIUM

COMMON PROFILES - 48

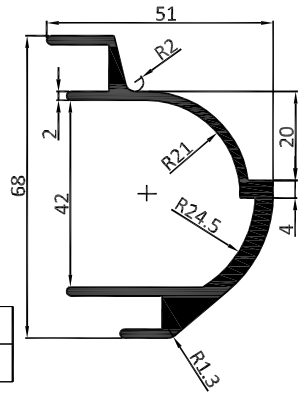

SEC NO	WEIGHT kg /mtr.
8362	1.209

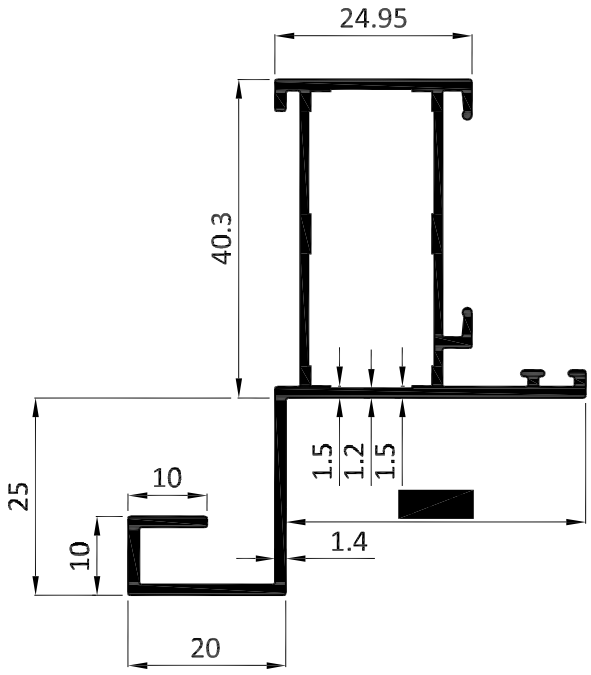

SEC. NO	WEIGHT(kg/m)
K6705	0.752

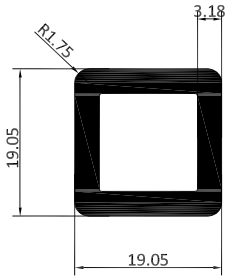

SEC NO	WEIGHT kg /mtr.
1861	0.537

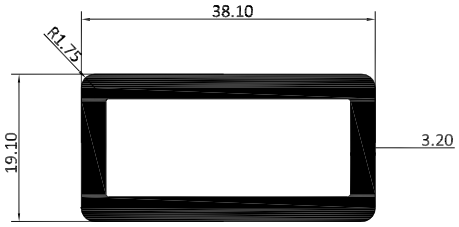

SEC NO	WEIGHT kg /mtr.
1983	0.870

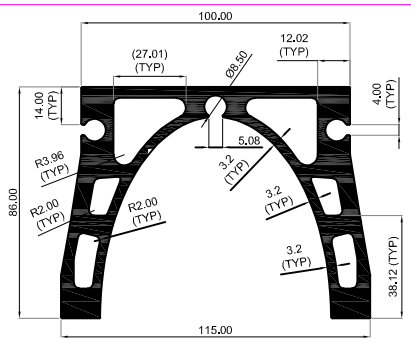

SEC NO	WEIGHT kg/m
K7216	6.9

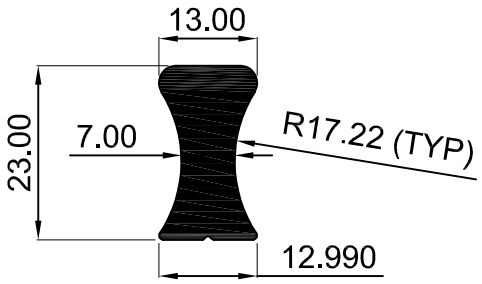

SEC NO	WEIGHT kg/m
K7497	0.585

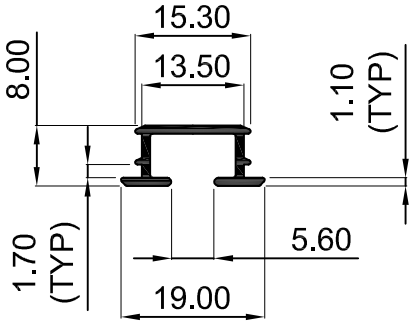

SEC NO	WEIGHT kg/m
K7498	0.118

ALL DIMENSIONS ARE IN MM

KMC ALUMINIUM

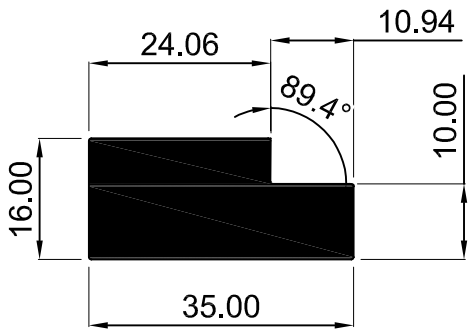

SEC NO	WEIGHT kg/m
K7291	1.353

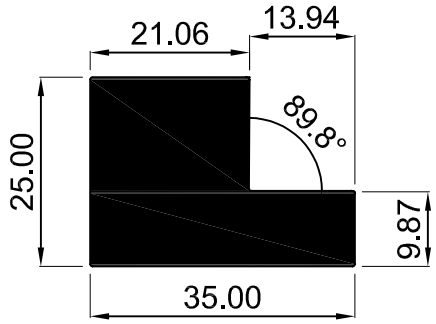

SEC NO	WEIGHT kg/m
K7292	1.823

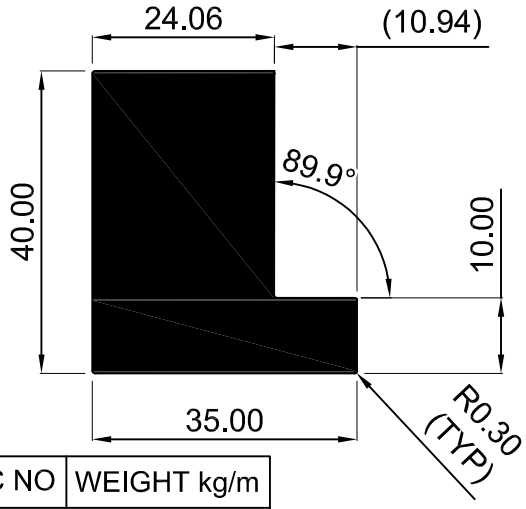

SEC NO	WEIGHT kg/m
K7293	2.934

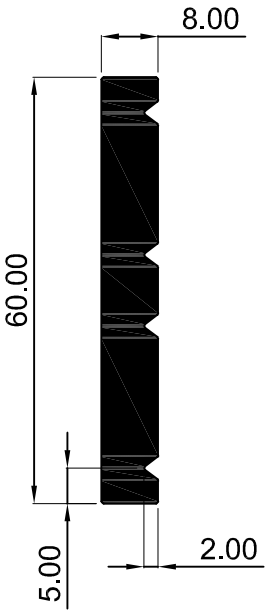

SEC NO	WEIGHT kg/m
K7122	1.275

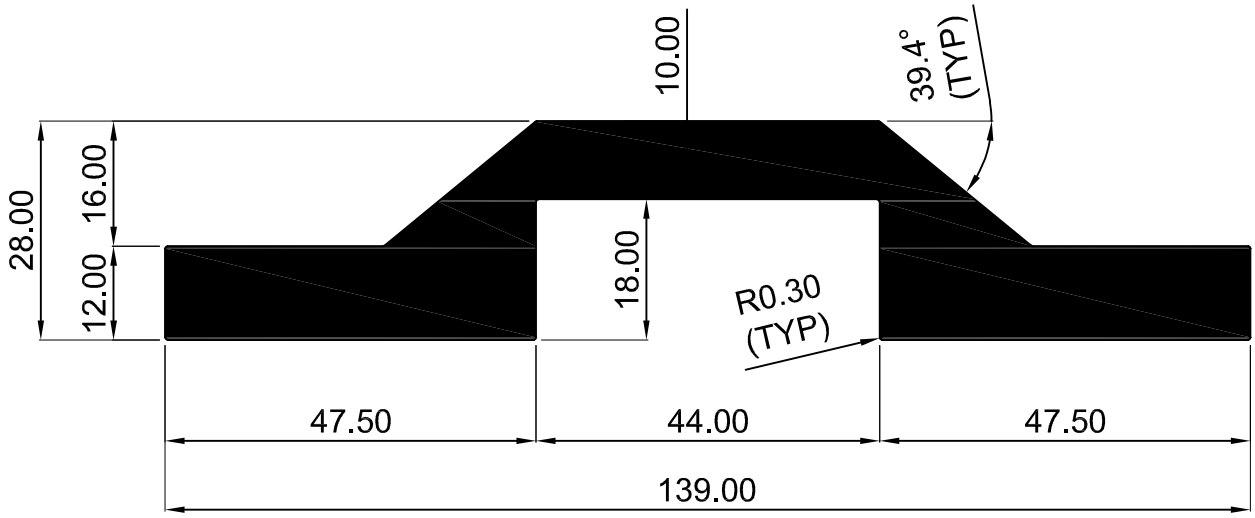

SEC NO	WEIGHT kg/m
K7120	5.184

KMC ALUMINIUM

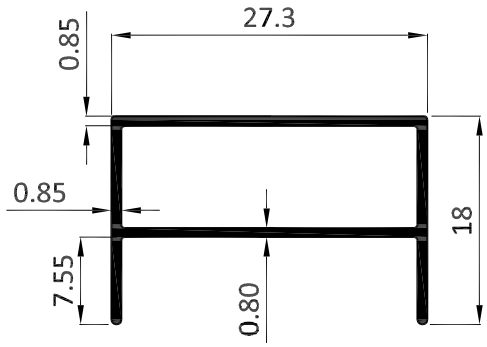

SEC. NO	WEIGHT(kg/m)
K6654	0.197

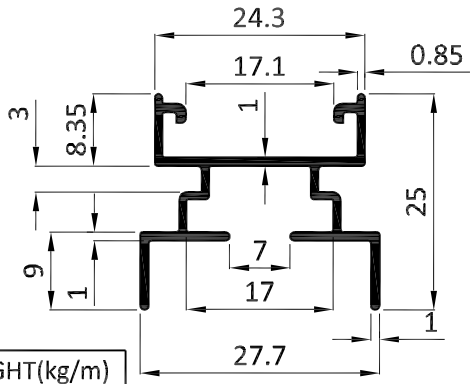

SEC. NO	WEIGHT(kg/m)
K6655	0.265

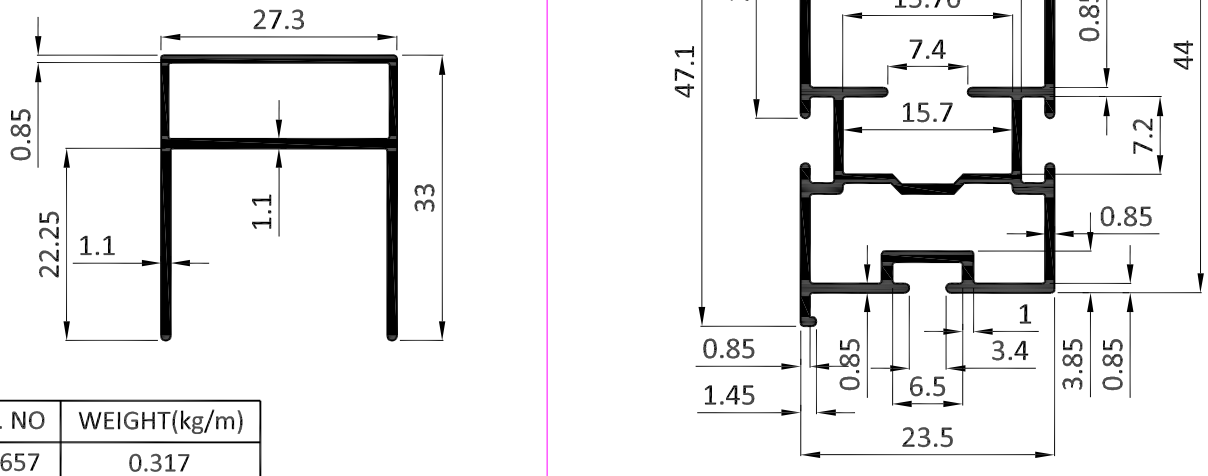

SEC. NO	WEIGHT(kg/m)
K6656	0.387

SEC. NO	WEIGHT(kg/m)
K6657	0.317

KMC ALUMINIUM

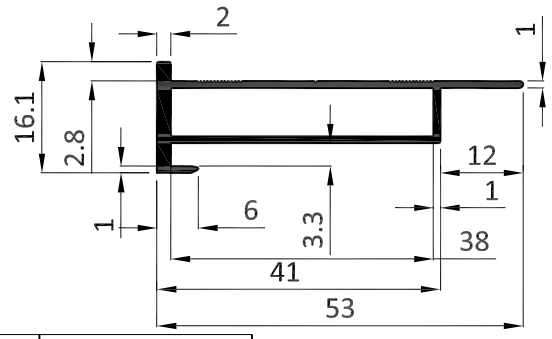

SEC NO	WEIGHT kg /m
K6630	0.357

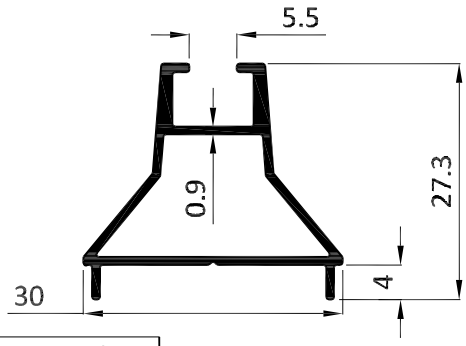

SEC NO	WEIGHT kg /m
K6933	0.283

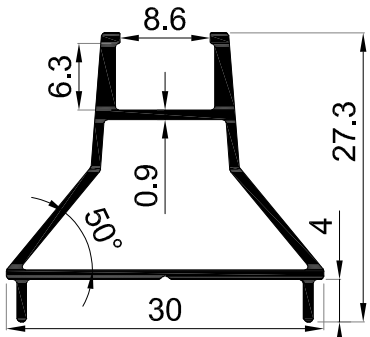

SEC NO	WEIGHT kg/m
K7093	0.276

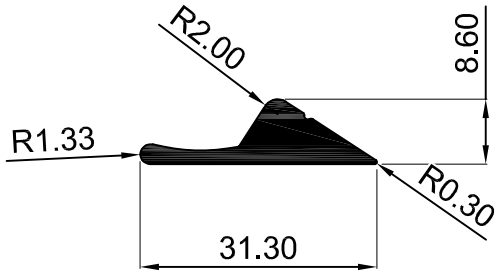

SEC NO	WEIGHT kg/m
K7496	0.322

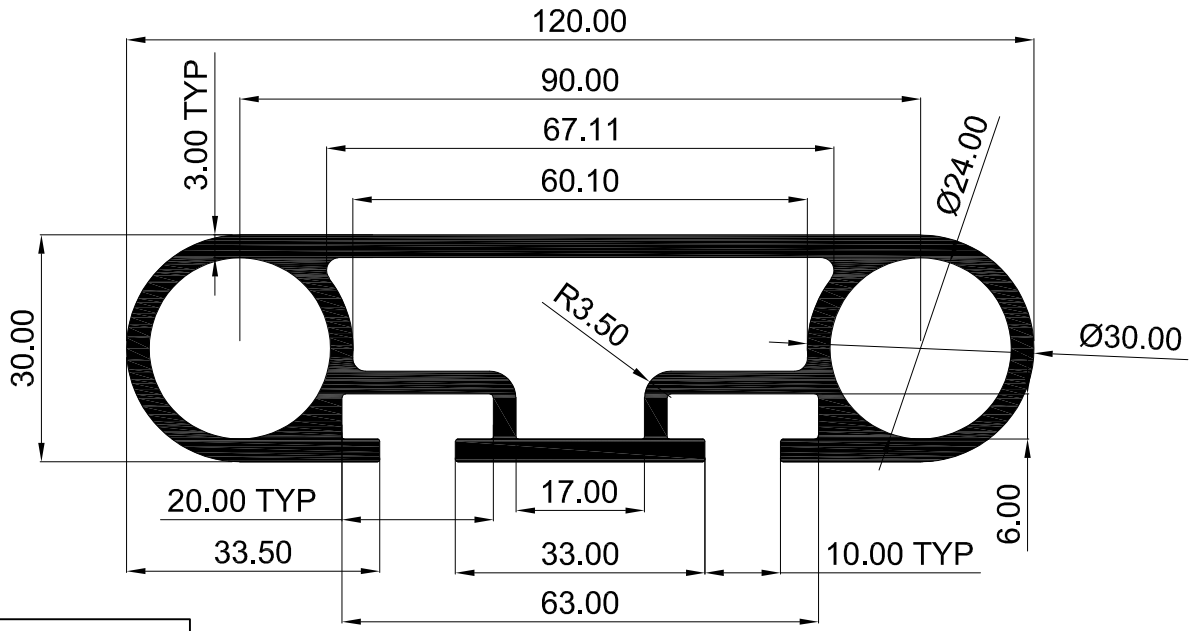

SEC NO	WEIGHT kg/m
K7247	3.036

KMC ALUMINIUM

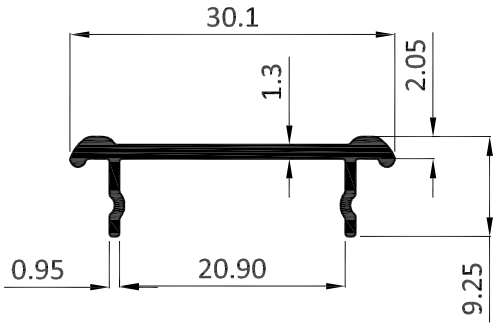

SEC NO	WEIGHT kg /m
K6934	0.157

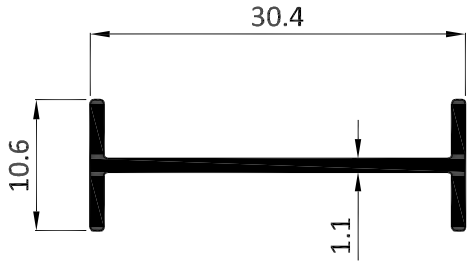

SEC NO	WEIGHT kg /m
K6935	0.147

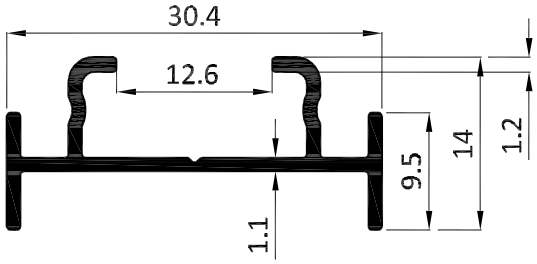

SEC NO	WEIGHT kg /m
K6936	0.204

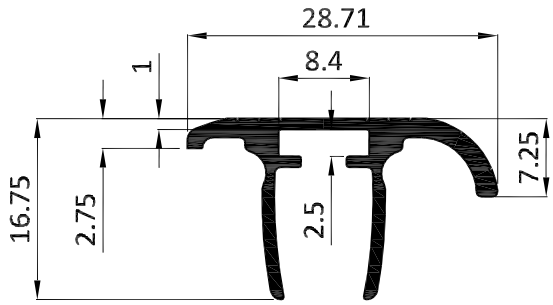

SEC NO	WEIGHT kg /m
K6937	0.246

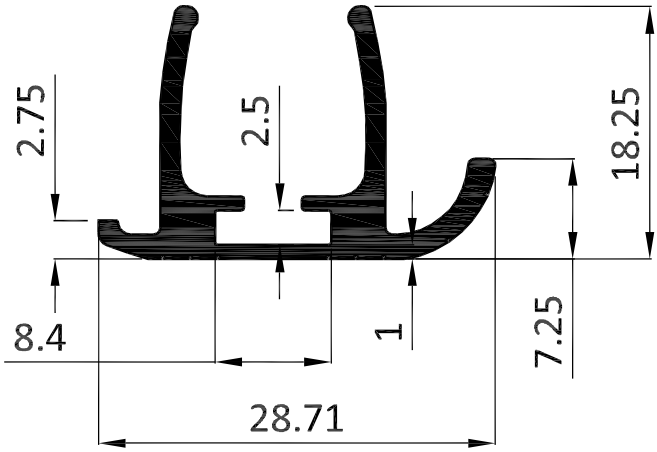

SEC NO	WEIGHT kg /m
K6938	0.204

KMC ALUMINIUM

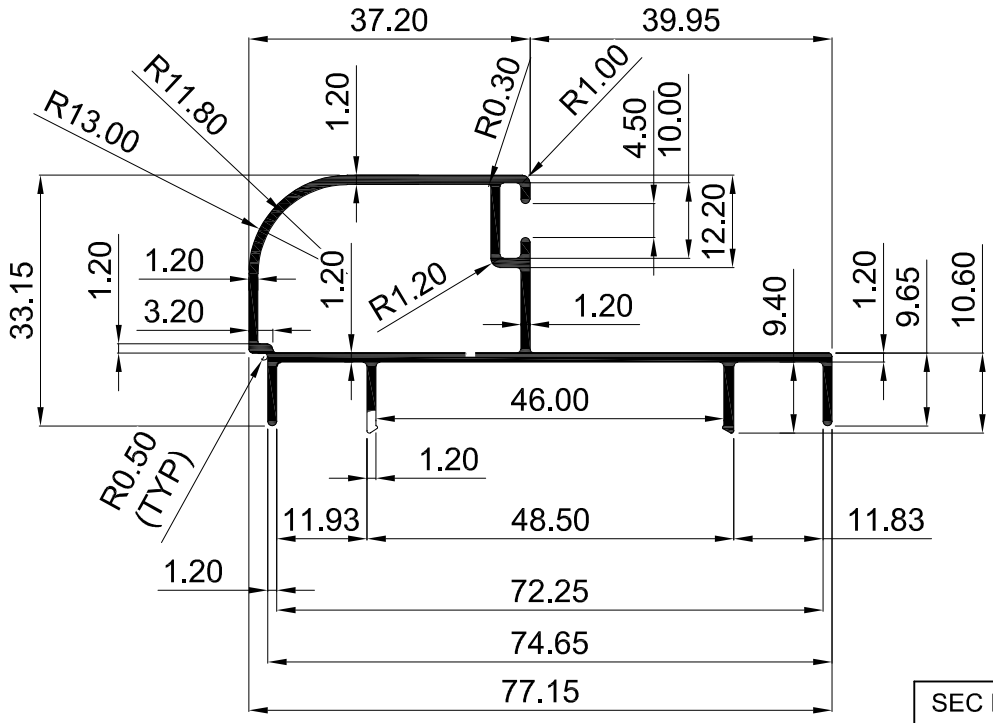

SEC NO	WEIGHT kg/m
K7157	0.650

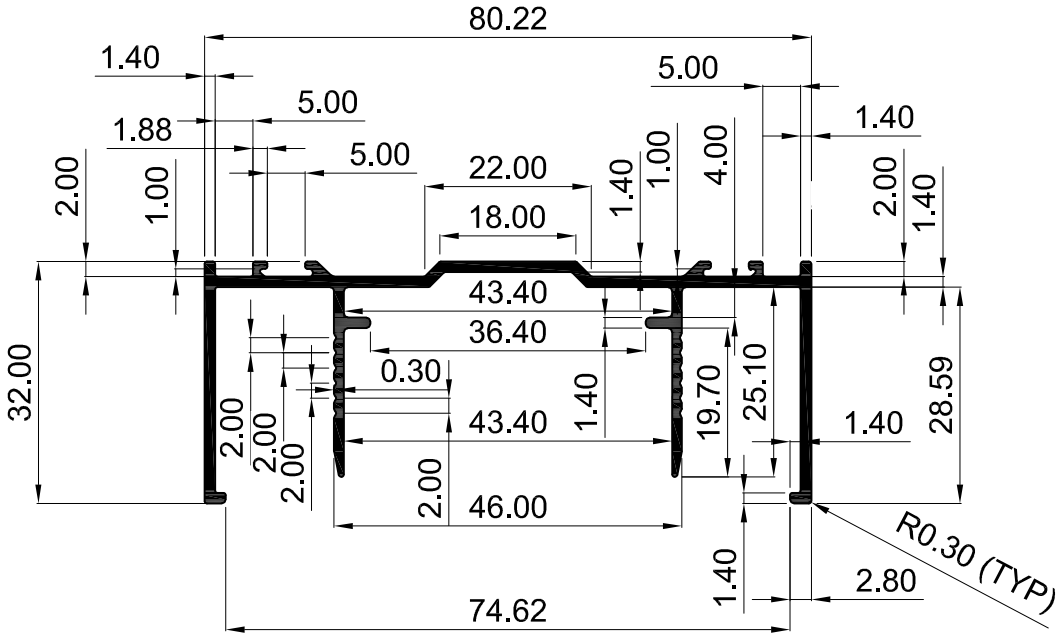

SEC NO	WEIGHT kg/m
K7158	0.792

ALL DIMENSIONS ARE IN MM

KMC ALUMINIUM

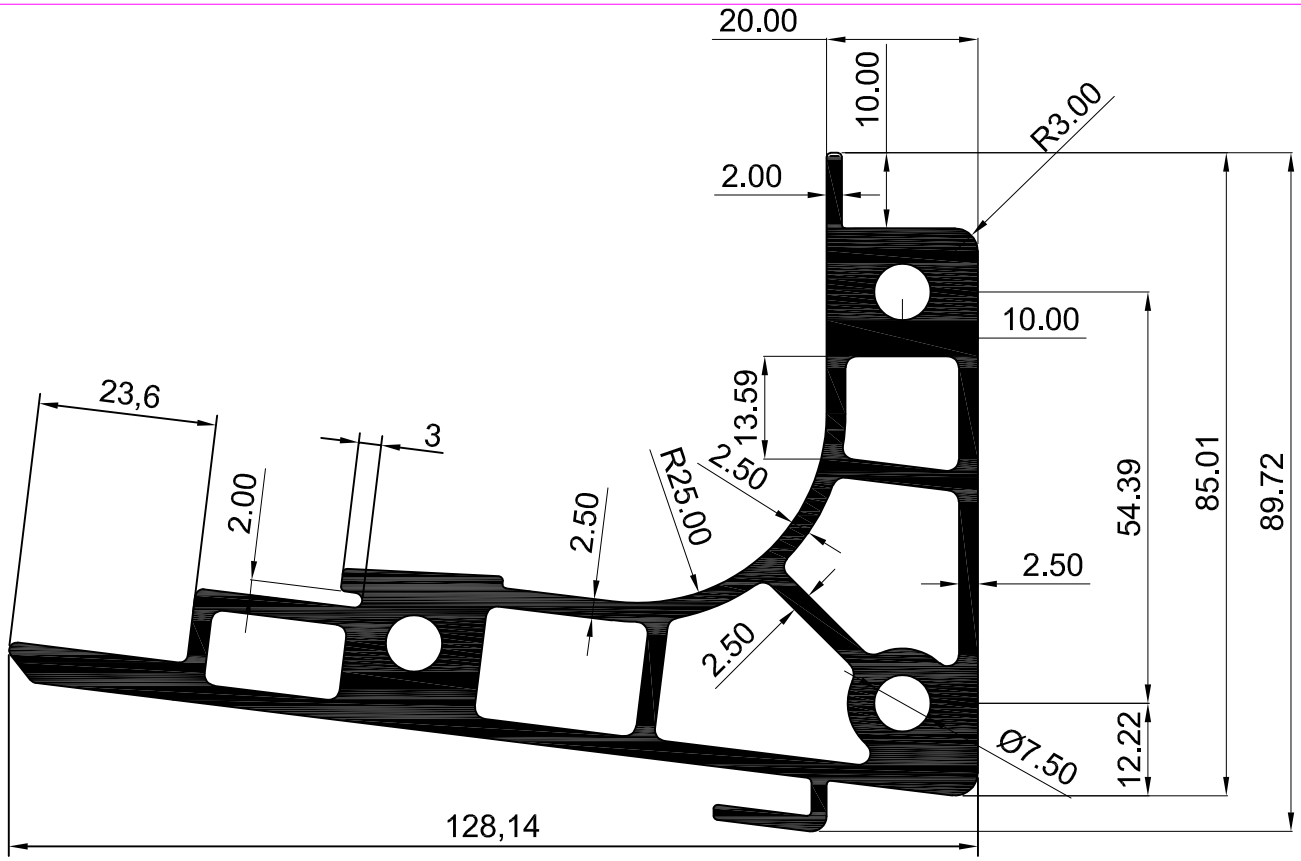

SEC NO	WEIGHT kg/m
K7297	4.573

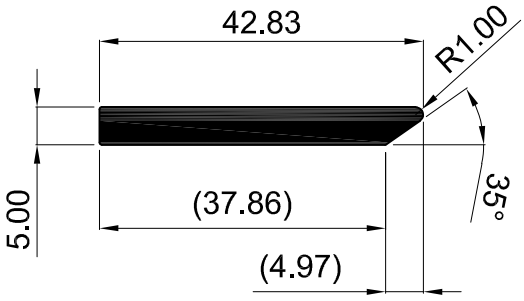

SEC NO	WEIGHT kg/m
K7336	0.562

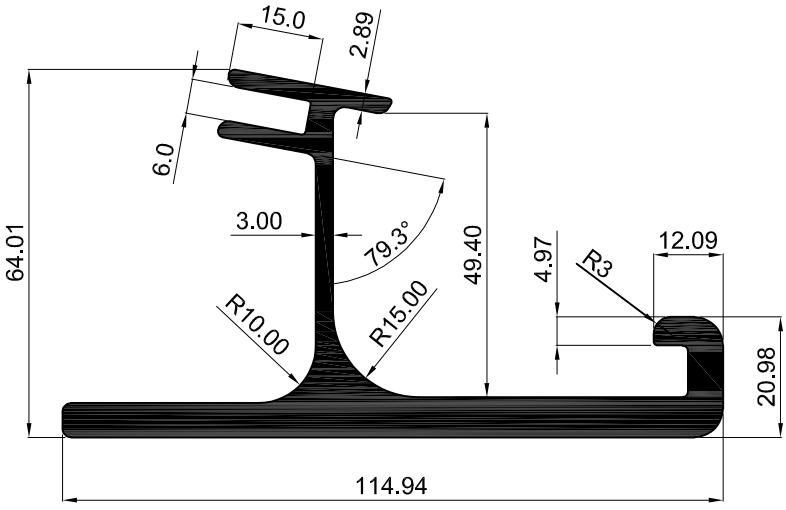

SEC NO	WEIGHT kg/m
K7337	3.363

COMMERCIAL

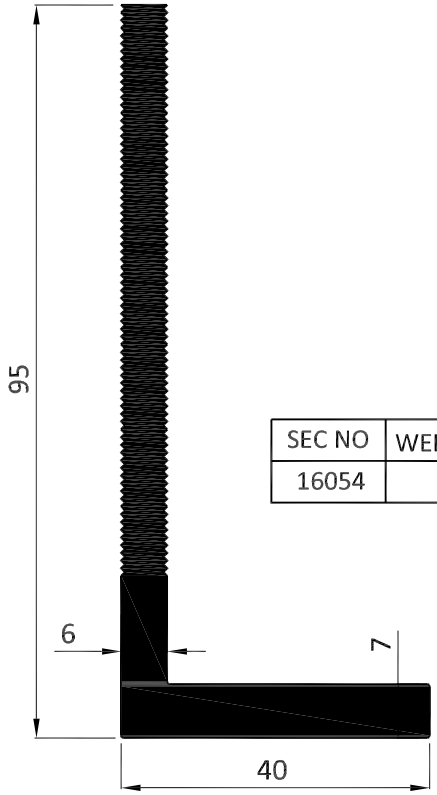

SEC NO	WEIGHT kg /mtr.
16054	2.081

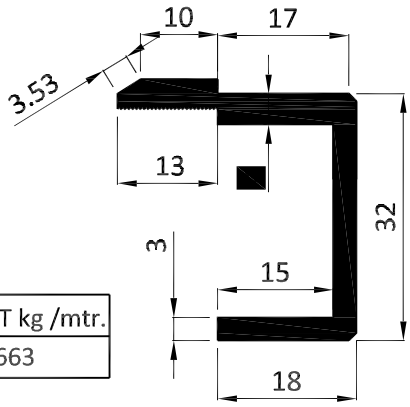

SEC NO	WEIGHT kg /mtr.
16051	0.663

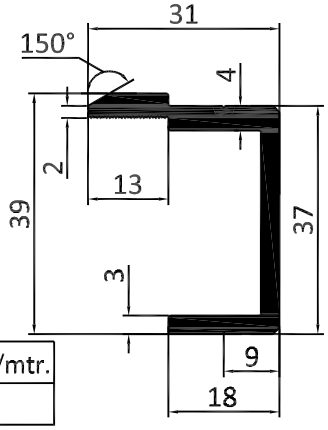

SEC NO	WEIGHT kg /mtr.
16023	0.706

COMMERCIAL

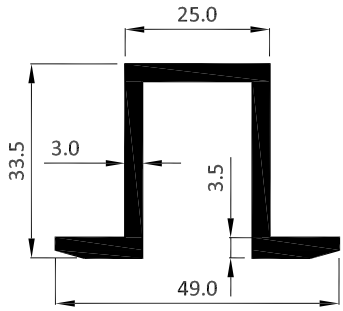

SEC NO	WT/RANGE/12'
8385	2.982 - 3.578

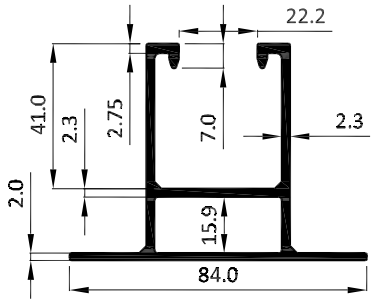

SEC NO	WT/RANGE/12'
8399	5.239 - 6.287

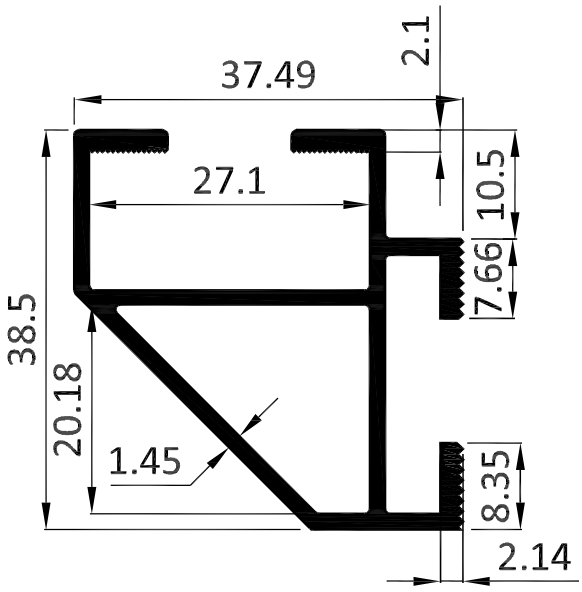

SEC NO	WEIGHT kg /mtr.
K6471	0.660

COMMERCIAL

COMMERCIAL

KMC ALUMINIUM

COMMERCIAL

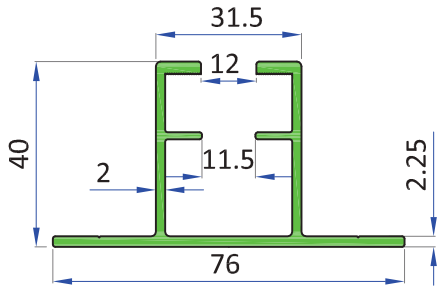

SEC NO	WEIGHT kg /mtr.
16034	1.044

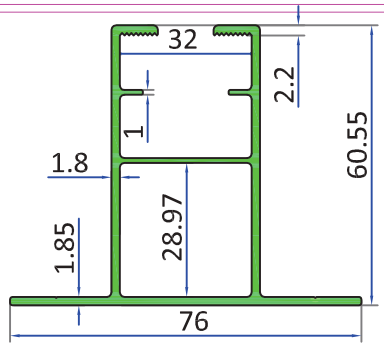

SEC NO	WEIGHT kg /mtr.
16024	1.144

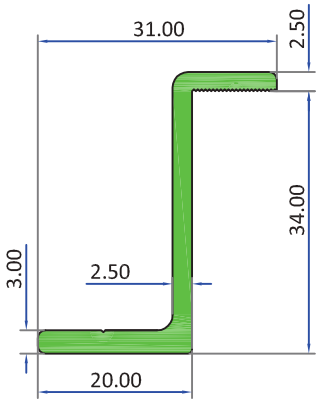

SEC NO	WEIGHT kg /mtr.
16035	0.456

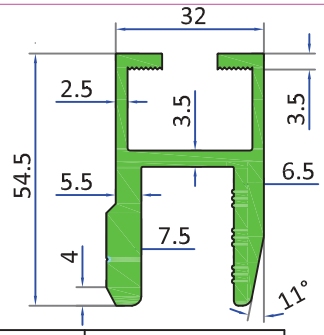

SEC NO	WEIGHT kg /mtr.
16029	1.736

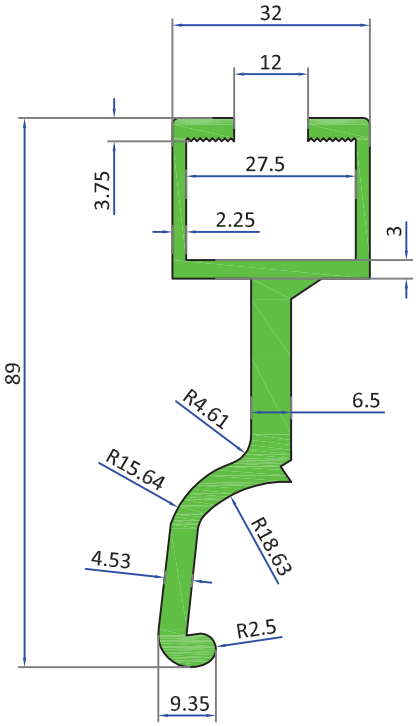

SEC NO	WEIGHT kg /mtr.
16053	1.787

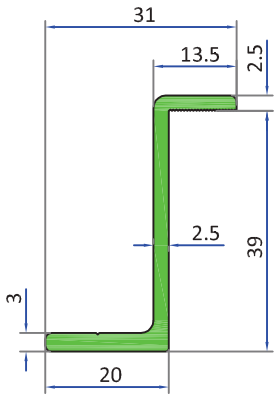

SEC NO	WT/RANGE/12'
16052	0.490

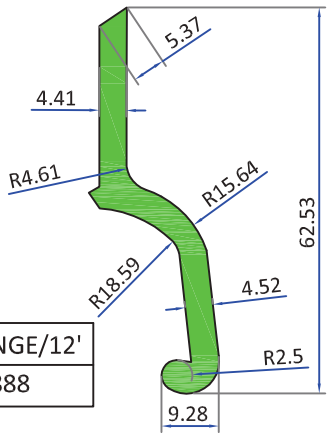

SEC NO	WT/RANGE/12'
16057	0.888

COMMERCIAL

KMC ALUMINIUM

SOLAR

COMMERCIAL

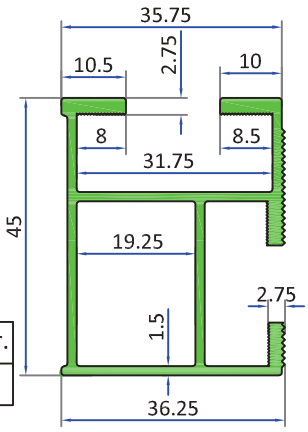

SEC NO	WEIGHT kg /mtr.
16056	0.855

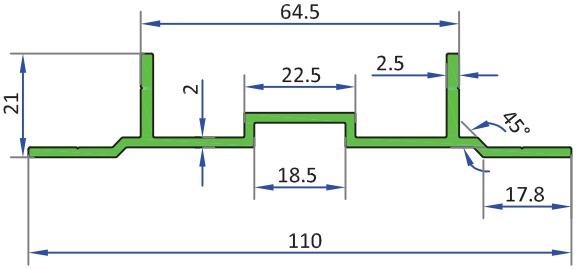

SEC NO	WEIGHT kg /mtr.
16026	0.887

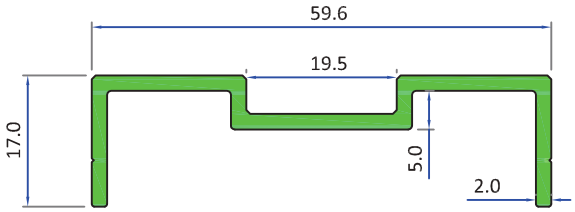

SEC NO	WEIGHT kg /mtr.
16027	0.536

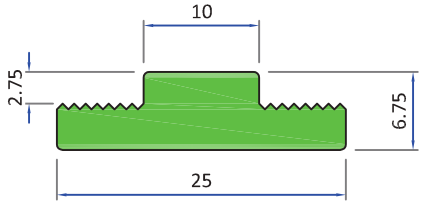

SEC NO	WEIGHT kg /mtr.
16028	0.333

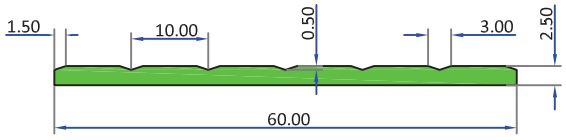

SEC NO	WEIGHT kg /mtr.
16055	0.392

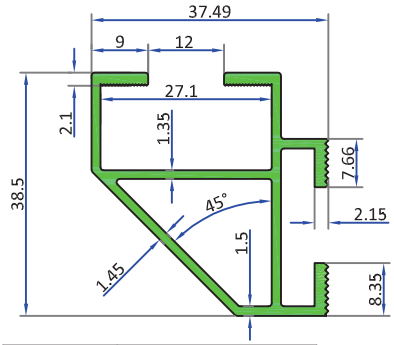

SEC NO	WT/RANGE/12'
K6471	0.660

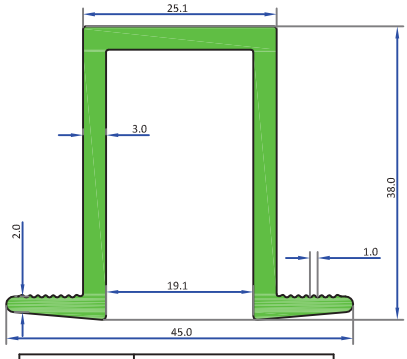

SEC NO	WEIGHT kg /mtr.
8313	0.897

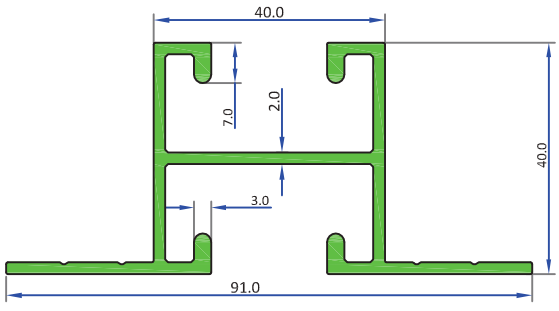

SEC NO	WEIGHT kg /mtr.
8301	1.226

ALL DIMENSIONS ARE IN MM

COMMERCIAL

KMC ALUMINIUM

COMMERCIAL

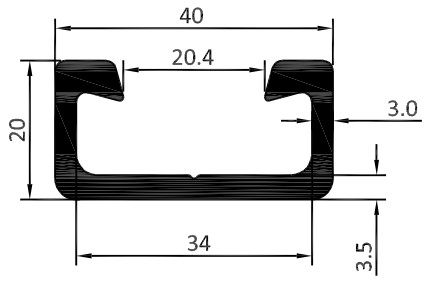

SEC NO	WEIGHT kg /mtr.
8148	0.809

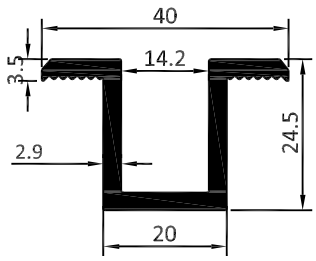

SEC NO	WEIGHT kg /mtr.
8176	0.651

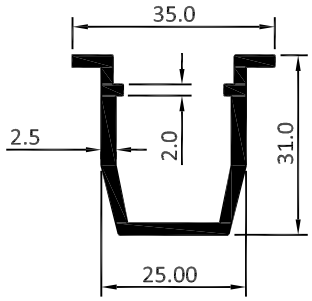

SEC NO	WEIGHT kg /mtr.
8187	0.540

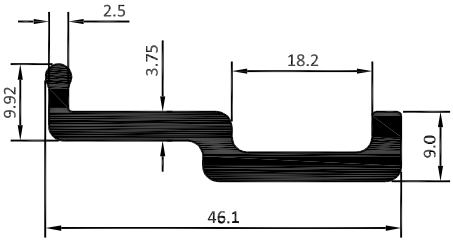

SEC NO	WEIGHT kg /mtr.
8388	0.610

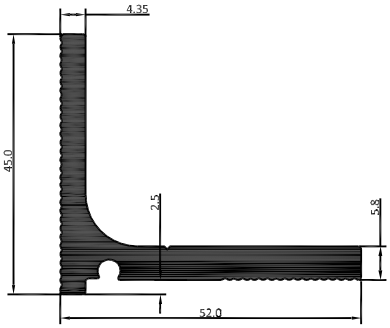

SEC NO	WEIGHT kg /mtr.
8389	1.265

COMMERCIAL

ALL DIMENSIONS ARE IN MM

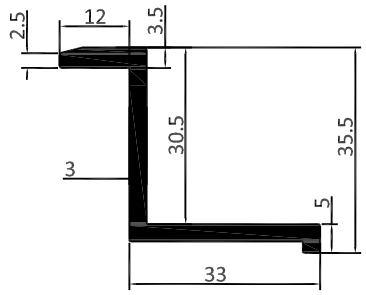

SEC NO	WEIGHT (kg/m)
8982	0.638

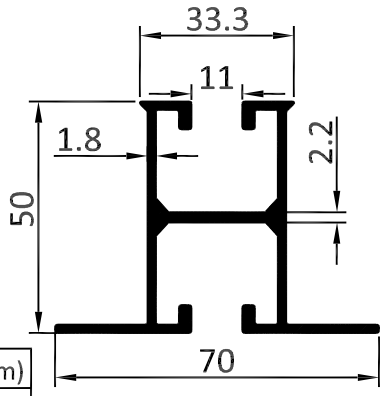

SEC NO	WEIGHT (kg/m)
8143	1.163

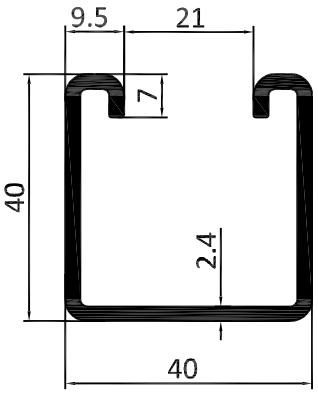

SEC NO	WEIGHT (kg/m)
8859	0.859

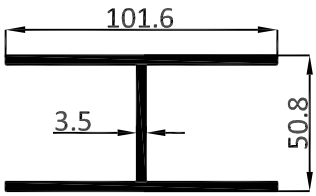

SEC NO	WEIGHT (kg/m)
8860	2.333

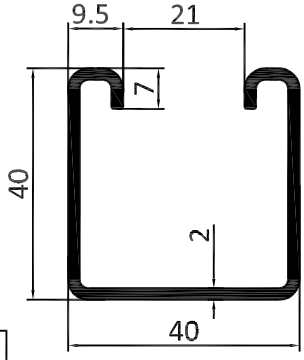

SEC NO	WEIGHT (kg/m)
8964	0.726

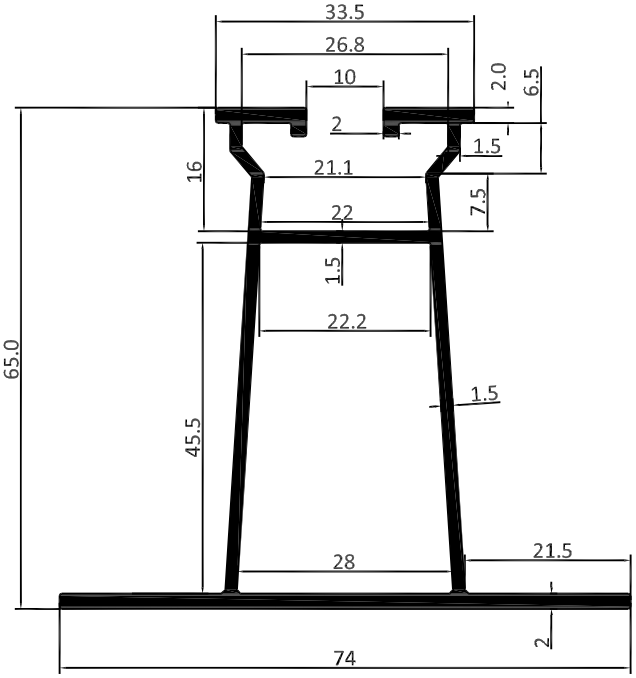

SEC NO	WEIGHT (kg/m)
8983	1.139

COMMERCIAL

COMMERCIAL

KMC ALUMINIUM

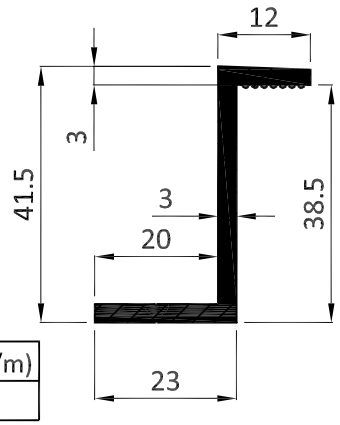

SEC NO	WEIGHT (kg/m)
K6805	0.595

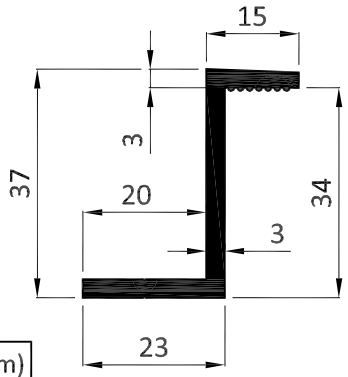

SEC NO	WEIGHT (kg/m)
K6806	0.558

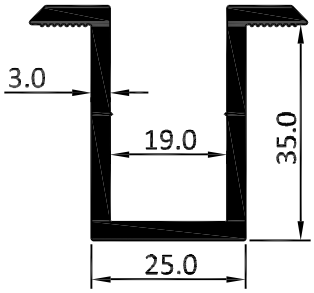

SEC NO	WT/RANGE/12'
7405	3.180 -3.540

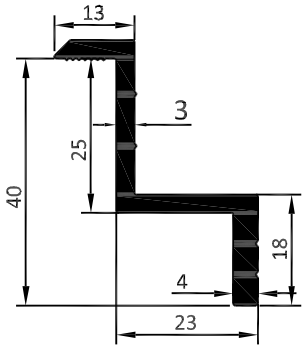

SEC NO	WT/RANGE/12'
7422	2.060 - 2.470

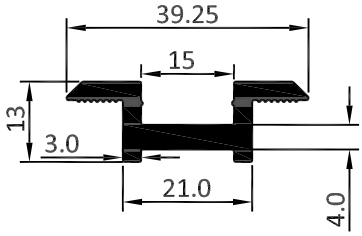

SEC NO	WT/RANGE/12'
7421	1.670 - 2.000

COMMERCIAL

COMMERCIAL

COMMERCIAL

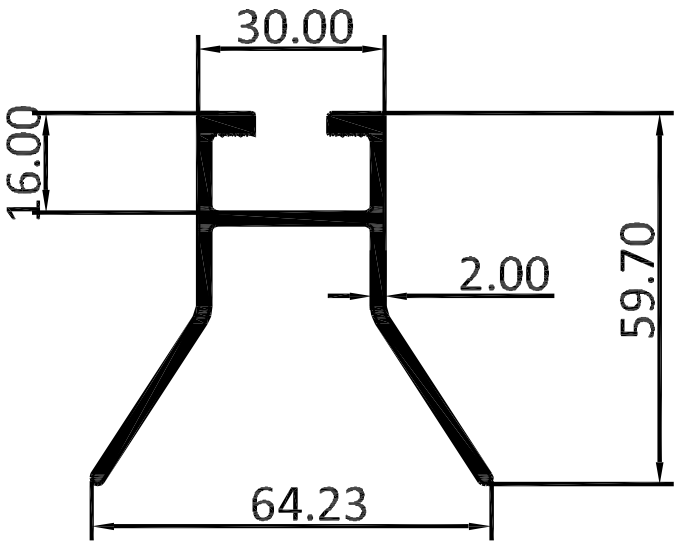

SEC NO	WT/RANGE/12'
8789	3.191-3.830

COMMERCIAL